LINEAR UNITS

www.DanaherMotion.com

THOMSON NEFF™

THOMSON TOLLO™

Solutions by DANAHER MOTION

ENG | March 2006

Mechanical and Electro-Mechanical Product Solutions by Danaher Motion

Danaher Motion's wide range of motion control systems and components offer customers an unprecedented choice in selecting the right solution for their particular application requirements.
Our product innovations have been improving the efficiency and productivity of complex manufacturing operations for over 60 years through trusted brand names such as Dover, Kollmorgen, Pacific Scientific, Portescap and Thomson in industries as diverse as semiconductor, aerospace and defence, mobile-off-highway, packaging, medical and robotics.

Our growing family of leading motion control products tells only half the story. With a worldwide service and support infrastructure, our field service engineers and support teams are available when you need them.
It is part of the Danaher Corporation's unrelenting focus on you, our customer. That's why more and more design engineers are turning to Danaher Motion to meet their motion control requirements.

Danaher Motion Values

- Application Expertise
- Broad & Innovative Motion Control Products and Systems
- Customer Focus
- Customisable Products and Services
- Motion Control Pioneers with Global Staying Power
- Operational Excellence

DOVER™

KOLLMORGEN™

PACIFIC SCIENTIFIC™

Portescap™

THOMSON™

Table of Contents


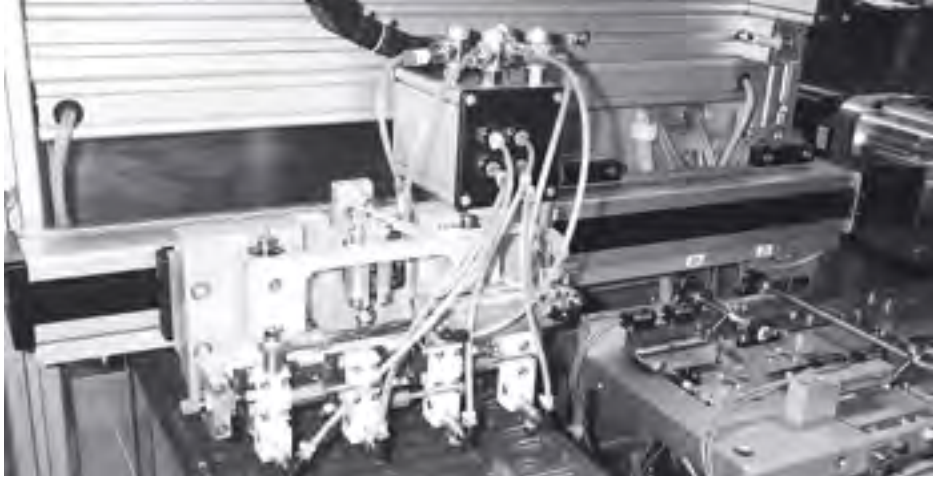

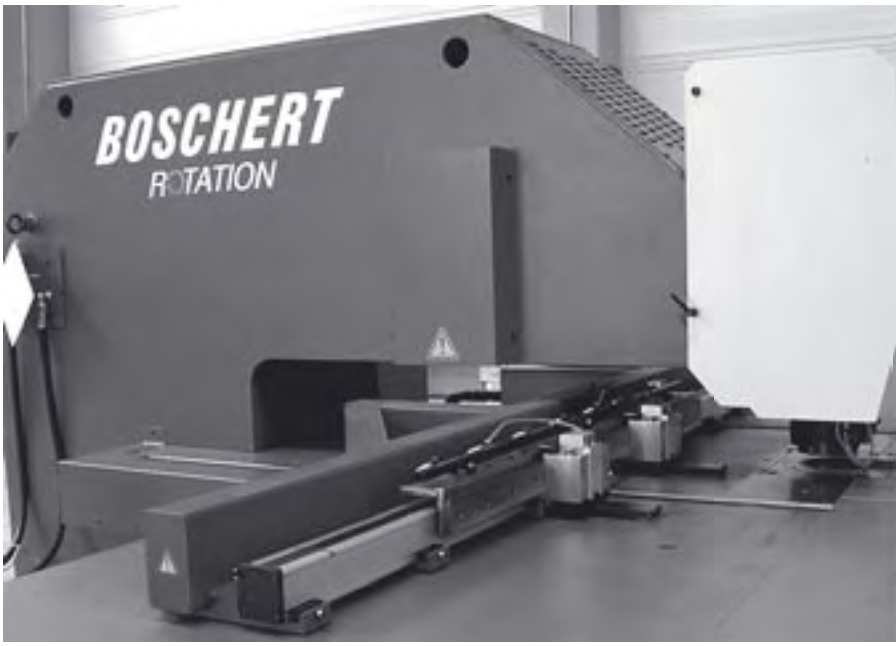
BOSCHERT
ROTATION





Introduction

Danaher Motions linear units range consists of products from world known brands such as Thomson, Neff and Tollo. These three companies have been a part of the linear unit development elite for decades and are now forming one group of products offered to the market under the brand name Thomson.
Regardless of your application you can be sure that Danaher Motion can offer you a product to match your linear motion needs.

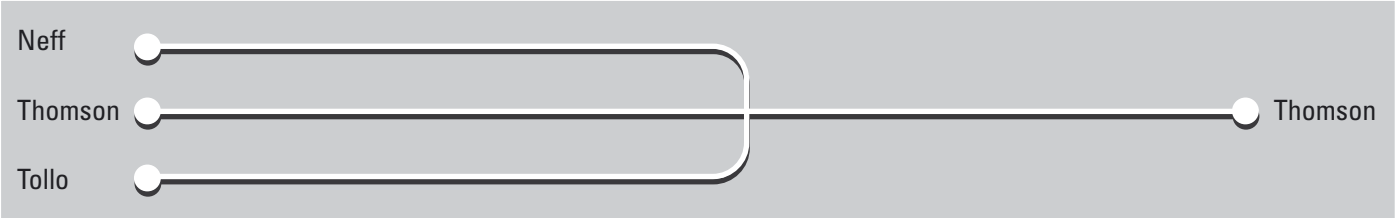

Neff was founded in 1905 offering products for the linear motion market and over the decades Neff has become a market leader the ball screw technology. The first linear unit from Neff was presented in 1981 at the FAMETA show in Stuttgart.

Thomson dates back to the 1940s when the first ball bushing bearing in the world was presented to the market. The product porfolio expanded and in the 1980s Thomson built their first complete linear unit.

Tollo was founded in 1981 and started as a lifting equipment manufacturer. The product potfolio grew rapidly and in 1982 Tollo presented their first linear unit at the Technical Fair in Stockholm.

Danaher Motion has now selected the most competitive products from each brand resulting in a state of the art product range. The range covers the smallest and most compact linear units to the biggest and most robust. Danaher Motion can match your linear motion needs with a wide range of ball screw and belt driven units using a variety of guide technologies , designed to work in harsh environments, at high speeds or in high precision systems.

How to Choose a Unit

Thomson offer a wide range of linear units, each designed for a specific purpose and with its own unique features. You'll find sizing and selection tools on our website to help you specify the unit you need, and our application engineers will be happy to help you with further technical advice.

The diagrams shown here give you a brief overview of the key strengths of each group.

Ball Screw Driven, Ball Guided Units

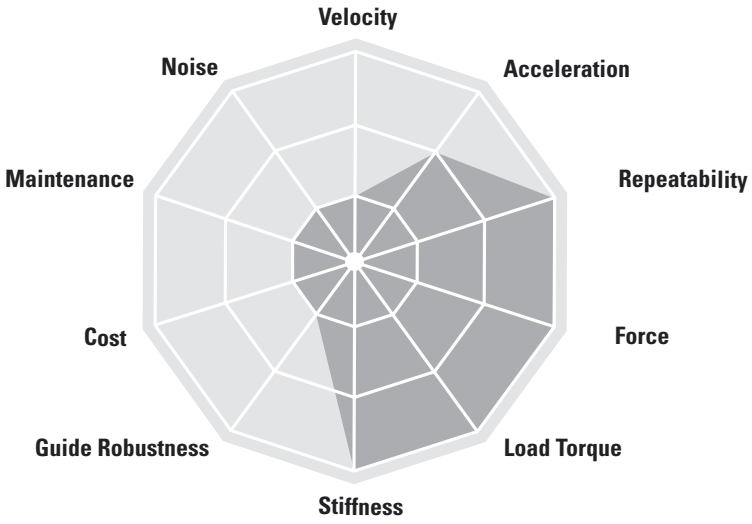

Units designed for high thrust, payload, high precision and stiffness.

- Force up to 12000 N
- Repeatability down to 0,005mm

Ball Screw Driven, Slide Guided Units

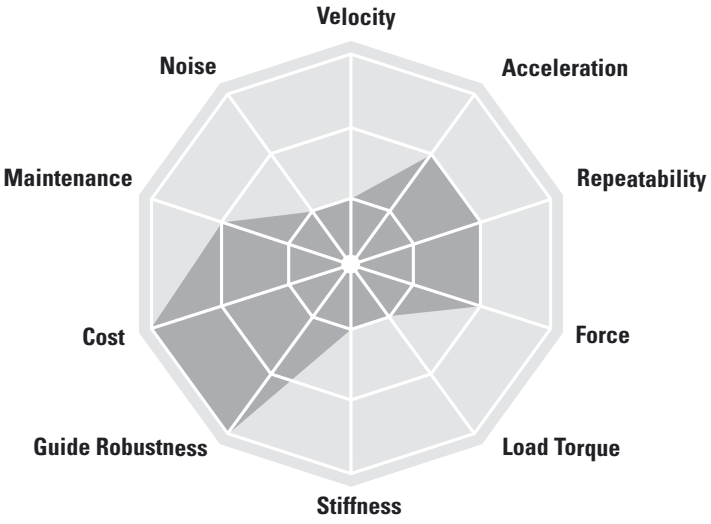

Designed for low cost, high thrust operations in demanding environments.

- Cost efficient unit
- Washdown protected versions
- Durable guide system

Belt Driven, Ball Guided Units

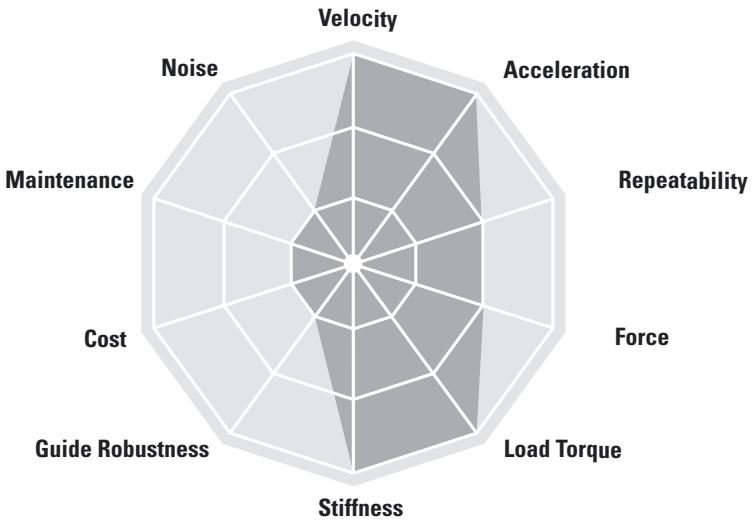

Smooth running units for dynamic applications with high speed, high acceleration and high loads requiring a long lifetime.

- Speed up to 5 m/s
- Accelartion up to 40 m/s^2

Belt Driven, Slide Guided Units

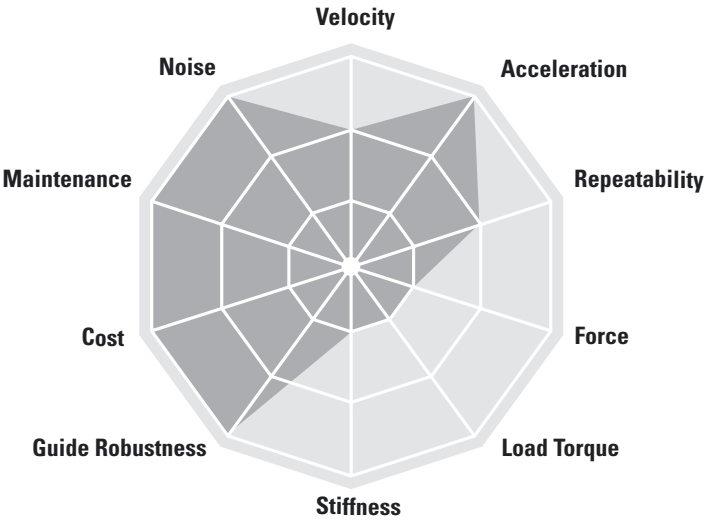

Units for dynamic applications requiring high speed, high acceleration, low maintenance and smooth travel.

- Cost efficient guide system
- Chemically protected versions

Belt Driven, Wheel Guided Units

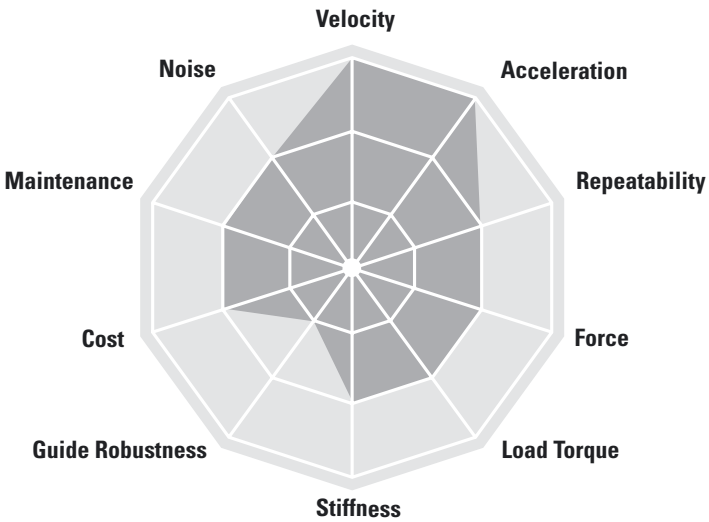

Units for dynamic applications with high speed, high acceleration, smooth motion and medium to high loads.

- Speed up to 10 m/s
- Acceleration up to 40 m/s^2

Linear Lifting Units

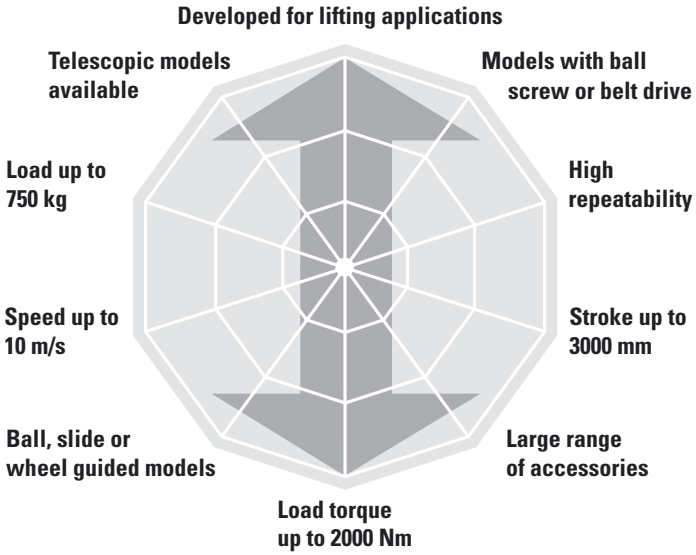

Units for lifting applications. Often used in X-Y configurations in combination with other linear units.

Linear Rod Units

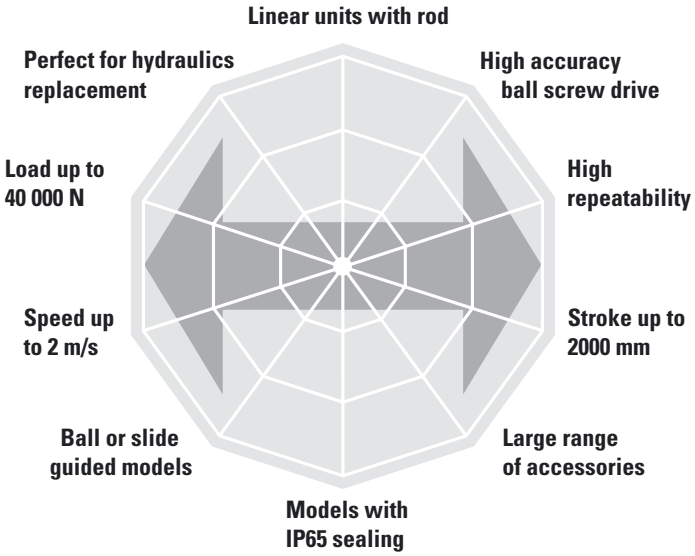

Units designed for lifting applications or for the replacement of hydraulic and pneumatic cylinders.

Technical Introduction

Basic Linear Unit Terminology

Screw Driven Unit

Belt Driven Unit

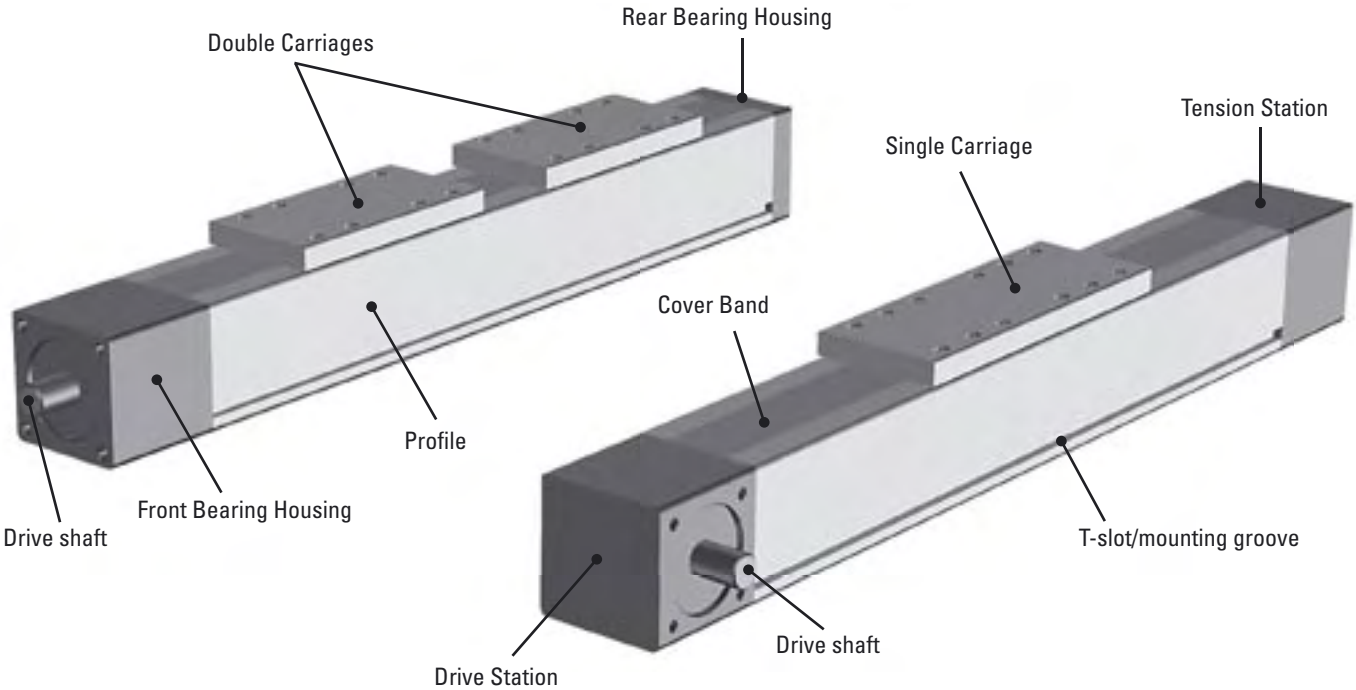

Ball Screw Drive

A ball screw is made up of a rotating screw and a moving ball nut. The ball nut is attached to the carriage of the unit. It does not have a normal thread, instead balls circulate inside the nut making it work as an efficient ball bearing that travels along the screw. Ball screws come in a large variety of leads, diameters and tolerance classes. The tolerance class (T3, T5, T7 or T9) indicates the lead tolerance of the screw. The lower the number, the higher the tolerance. High load capability and high accuracy are typical of ball screw driven units.

Belt Drive

A belt drive consists of a toothed belt which is attached to the carriage of the unit. The belt runs between two pulleys positioned at either end of the profile. One pulley is attached to the motor while the other is mounted in a tensioning station. The belts are made of plastic reinforced with steel cords. High speeds, long stroke, low noise and low overall weight are typical features of belt driven units.

Technical Introduction

Ball Guides

A ball guide consists of a ball rail and a ball bushing. The ball rail is made of hardened steel and runs along the inside of the profile. The ball bushing is attached to the carriage of the unit and contains balls that roll against the rail. The balls in the bushing can be recirculating or have fixed ball positions depending on the type of ball guide. The recirculating type has a longer life and better load capability while the fixed type typically is much smaller. Thomson uses three major types of ball guides in its linear units. Either the compact single rail type with recirculating ball bushing (A), the stronger double rail type also with recirculating ball bushings (B) or the fixed ball position ball bushings type (not shown) which require very little space and are used in the smallest units. Ball guides offer high accuracy, high loads and medium speed.

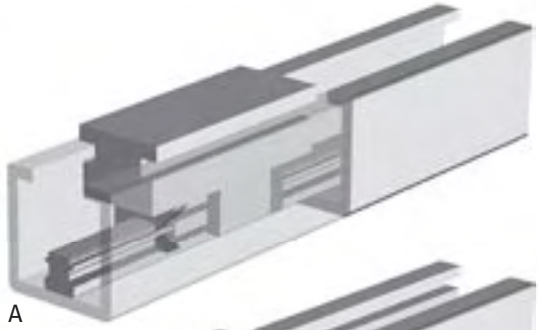

A

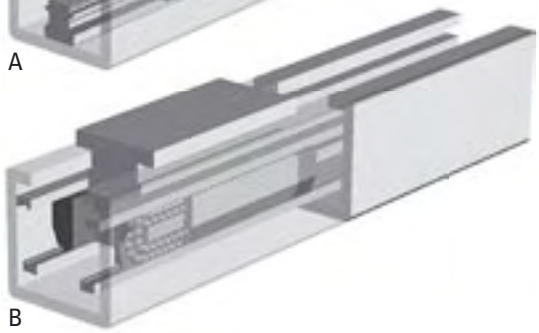

B

Slide Guides

A slide guide consist of a guide attached to the inside of the profile and a slide bushing attached to the carriage. The guide can be made of different materials (e.g. polished hardened steel, anodized aluminium) while the bushing is made of a polymer material. There are two types of bushings, fixed and prism. Prism bushings can move in relation to the guide which results in longer life and higher load capabilities. Slide bushings are silent, simple, reliable and robust and can be used in dirty and dusty environments. They are also resistant to shock loads, have a long life expectancy and require little or no maintenance.

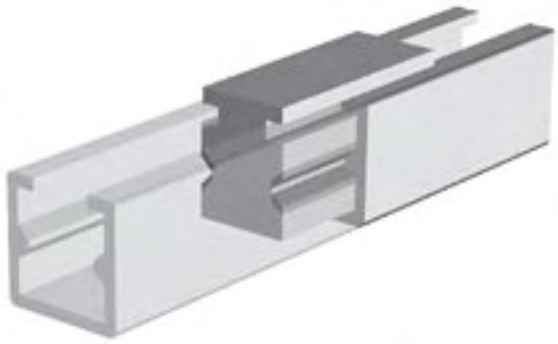

Wheel Guides

A wheel guide consists of ball bearing wheels that run on a hardened steel rail. Wheel guides are a simple and robust guiding method offering high speeds, high loads and medium accuarcy.

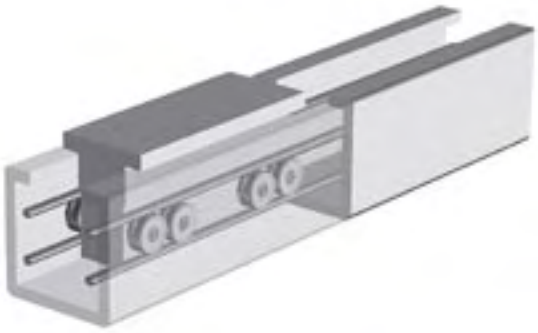

Screw Supports

Screw supports allow screw driven units to travel at high speed even when stroke becomes longer. The supports reduce the unsupported length of the screw, that otherwise would be subjected to vibrations. Screw supports come in single (one screw support on each side of the carriage) or double (two supports on each side) versions. Screw support units will have a slightly shorter stroke for a given overall length.

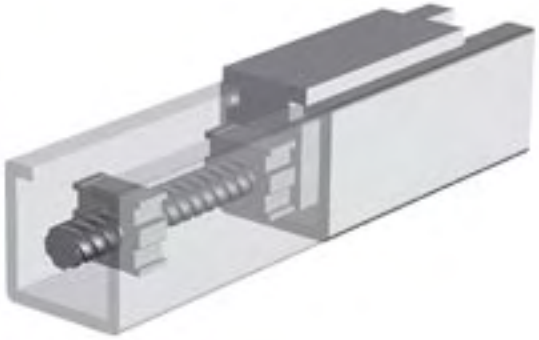

Ball Screw Units with Double Ball Nuts

Using double ball nuts will increase the repeatability of the unit. The ball nuts are installed so that they are pre-tensioned against each other eleminating the play between the nuts and the screw. A double nut unit will have a slightly shorter stroke for a given overall length.

Technical Introduction

Single Carriage

Single carriage units have one carriage. Some linear unit models also have the option of long or short single carriage. The long carriage handle higher loads but will have a longer overall length for a given stroke.

Double Carriages

Double carriage units have two carriages which gives them higher load capabilites than single carriage units. When ordering a double carriage unit the distance between the two carriages needs to be defined. This distance is called L_A or L_C depending on the model.

Cover Band

Cover bands are used on some units to protect then from the ingress of foreign objects through the opening in the profile where the carriage runs. They are made of plastic (A) or stainless steel (B). In the case of plastic the cover band seals the profile by snapping into small grooves running along the carriage opening. In the case of stainless steel the cover band seal the profile magnetically using magnet strips mounted on each side of the carriage opening. Some units equipped with cover bands also have a self-adjusting cover band tensioning mechanism. This eleminates any slack in the cover band that can occur from temperaure changes, thus improving the sealing degree and the expected life of the cover band.

A

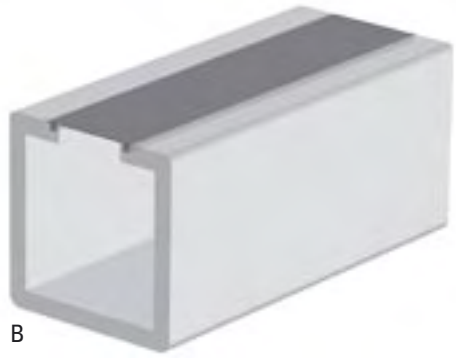

B

Theoretical Stroke and Practical Stroke

The theoretical maximum stroke (S max) is the length that the carriage can travel from one end of the unit to the other. However, using the maximum stroke means that the carriage will collide with the ends of the profile. The practical stroke is therefore shorter. We recommend that you specify a unit that have 100 mm longer stroke than the theoretical maximum stroke.

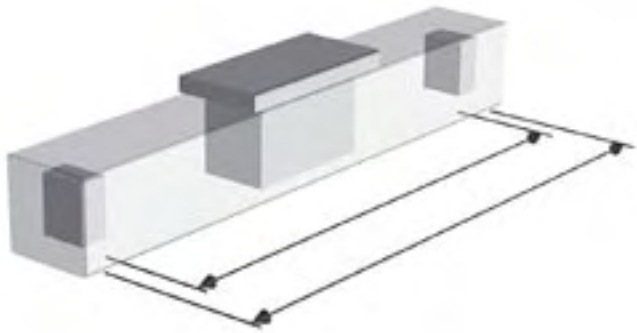

Units with Left/right Moving Carriages

Units with left/right moving carriages have two carriages moving in opposite directions when the drive shaft is rotated. This type of unit has a ball screw where half of the screw has a left hand thread and the other half a right hand thread.

Technical Introduction

Maintenance
Most units require lubrication. General lubrication requirements can be found in the general specifications table on the product data pages. The lubrication intervals, grease qualities and specific lubrication instructions can be found in the installation and service manual of each unit. No other regular maintenance is needed except for normal cleaning and inspection. Units with a cover band may also require irregular cover band replacement due to wear. The belt in belt driven units should not require re-tensioning under normal operating conditions.

Mounting Position
Most units can be mounted in any direction. Any restrictions on mounting positions are shown on the product presentation pages at the beginning of each product category chapter. Even where units may be mounted in any direction there are some considerations. None of the units are self-locking which means that a vertical unit will drop the carriage/load if no external brake (such as a brake in the motor, etc.) is applied to the drive shaft of the unit. In the case of belt driven units care must be taken as the carriage/load will drop immediately in the case of a belt breakage. This is particularly important in vertical applications. All ball screw driven units are equipped with a safety nut to prevent the carriage/load being released in case of ball breakage.

Working Environment
All units are designed for use in normal industrial environments. Units which have an open profile (i.e. have no cover band) are more sensitive to dust, dirt and fluids. These units require some kind of cover if they are used in environments where dust, dirt or fluids are present. Optional bellows/shrouds are available for some of our open profile units. Enhanced wash-down or chemical protection can be ordered for our closed profile units. Please refer to the accessory pages. In all cases where a unit will be exposed to aggressive chemicals, heavy vibrations or other potentially harmful processes we recommend that you contact us for further advice.

Duty Cycle
All units are designed for a 100% duty cycle. However, where the unit runs at extreme load, speed, acceleration and temperature or for long operating periods the expected life time may be reduced.

Operation and Storage Temperature
Operational temperature limits can be found in the performance tables on the product data pages. Units can be stored or transported within the same temperature range. Please contact us if the unit will be exposed to higher/lower temperatures than recommended during storage or transportation

Load and Load Torque Values
For some units the load and load torque values are given for both the complete unit and the guiding system. The values for the complete unit are the values under which the unit can operate. The values for the guiding system should only be used when comparing different units and do not describe the actual performance of the complete unit.

Deflection of the Profile
Some units require support along the whole profile whilst some are self supporting over a specified span. Further details can be found on the product data pages. The recommended support intervals should be followed to minimise deflection of the unit. The maximum distance between the support points is shown on the product data pages. The deflection of the unit can also be calculated using the information in the Additional data and calculations chapter.

Lifetime Expectancy
When determining the lifetime for a linear unit it is necessary to evaluate all forces and moments that are acting on the unit. The data and formulas given in this catalogue serve as a basis for this. For a more detailed lifetime calculation please use our sizing and selection software. Please contact us for further guidance.

End of Stroke Limit Switches
If a unit runs at speed to the ends of its stroke there is a risk of damage. Damage can be prevented by using end of stroke limit switches to detect and engage a break and/or cut power to the motor when the unit nears the end of the unit. You must ensure that there is sufficient distance between the end of stroke limit switch and the end of the unit, to allow the carriage to come to a complete stop before colliding with the end. The required stopping distance depends on the speed and the load and will have to be calculated for each application. The stopping distance must be taken into account when defining the necessary stroke.

Position Feedback
The position of the carriage/rod/lifting profile can be obtained in many ways. The most common way is to equip the unit with an encoder or to use a motor which has a built in feed back device (encoder, resolver, etc.). To many units there are encoders or/and encoder mounting kits available. See the accessory chapter.

Packages and Multi Axis Kits
Thomson can offer complete pre-defined packages (linear unit, gear and servo motor assembled and shipped with servo drive and cables) as well as mounting kits for the creation of two and three axis systems Please contact us for further information.

Linear Units with Ball Screw Drive and Ball Guide

PowerLine, ForceLine, Microstage, AccuSlide

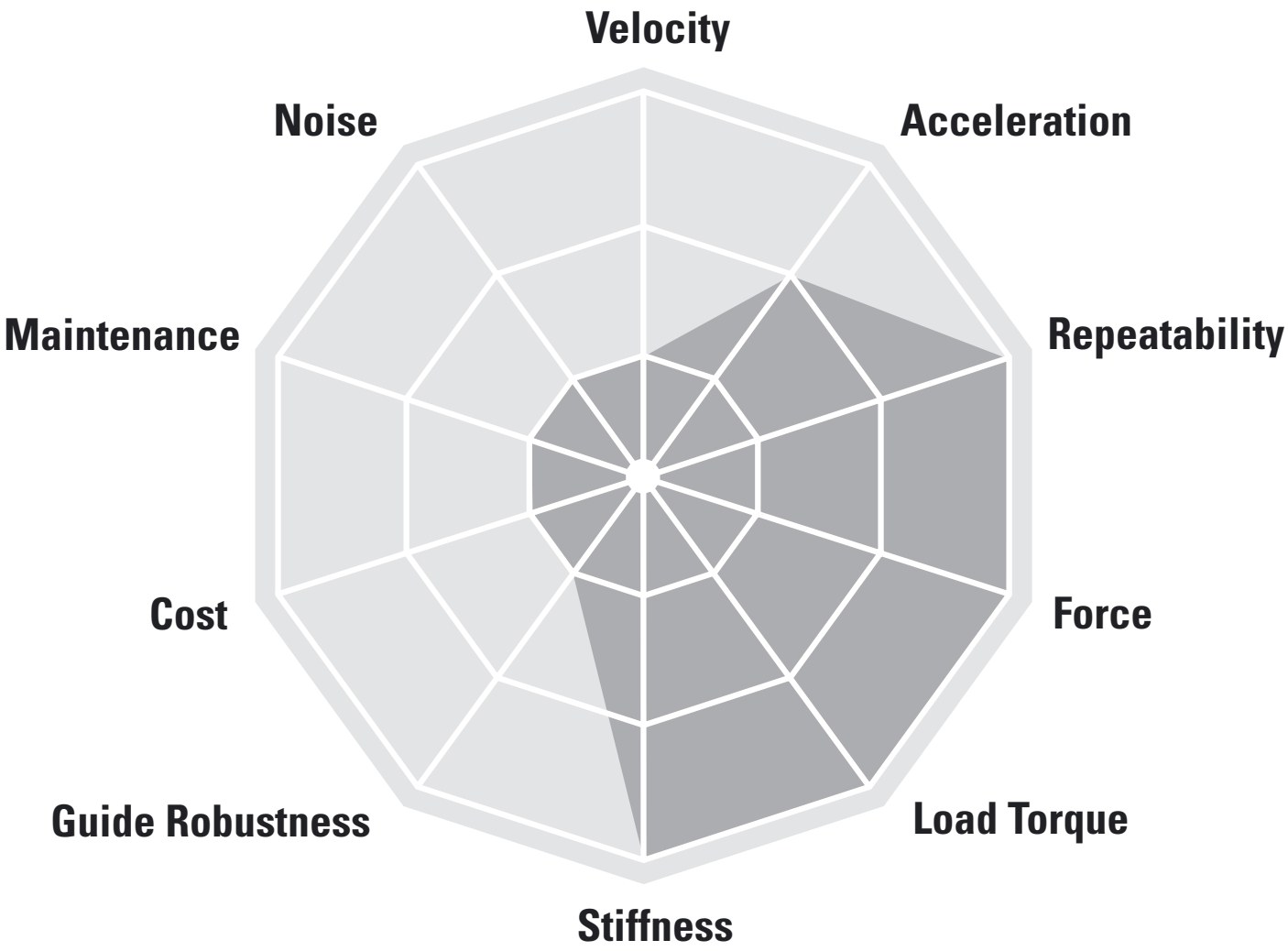

Typical Applications

Typical applications are where high accuracy and load capability is required but where speed is less important. Typical examples are machining operations and in the handling of heavy goods that need accurate positioning.

PowerLine **WM**


WM40

Features
- Can be installed in all directions
- Patented guide system
- Patented self-adjusting plastic cover band
- Patented screw support system

Parameter		WM40S	WM40D	WM60D	WM60S	WM60X	WM80D	WM80S	WM120D
Profile size (width × height)	[mm]	40 × 40	40 × 40	60 × 60	60 × 60	60 × 60	80 × 80	80 × 80	120 × 120
Stroke length (S max), maximum	[mm]	2000	2000	11000	5000	10340	11000	5000	11000
Linear speed, maximum	[m/s]	0,25	0,25	2,5	2,5	0,25	2,5	2,5	2,0
Dynamic carriage load (Fz), maximum	[N]	600	600	2000	1400	2000	3000	2100	6000
Remarks		single ball nut	double ball nuts	double ball nuts	single ball nut	left/right screw	double ball nuts	single ball nut	double ball nuts
Page		16	18	20	22	24	26	28	30

PowerLine **WV**


WV80

Features
- Can be installed in all directions
- Patented self-adjusting plastic cover band
- Patented screw support system
- The units require external guides

Parameter		WV60	WV80	WV120
Profile size (width × height)	[mm]	60 × 60	80 × 80	120 × 120
Stroke length (S max), maximum	[mm]	11000	11000	11000
Linear speed, maximum	[m/s]	2,5	2,5	2,0
Dynamic carriage load (Fz), maximum	[N]	-	-	-
Remarks		double ball nuts the units has no guides	double ball nuts the units has no guides	double ball nuts the units has no guides
Page		32	34	36

ForceLine **MLSM**


MLSM80D

Features
- Can be installed in all directions
- Patented guide system
- Patented plastic cover band
- Patented screw support system

Parameter		MLSM60D	MLSM80D
Profile size (width × height)	[mm]	160 × 65	240 × 85
Stroke length (S max), maximum	[mm]	5500	5200
Linear speed, maximum	[m/s]	2,5	2,0
Dynamic carriage load (Fz), maximum	[N]	6000	8000
Remarks		double ball nuts	double ball nuts
Page		38	40

AccuSlide 2HBE

2HBE20

Features

- Can be installed in all directions
- High load capablities
- Low profile height
- Play free ball screw offer high repeatability

Parameter		2HBE10	2HBE20
Profile size (width × height)	[mm]	100 × 33,5	200 × 44
Stroke length (S max), maximum	[mm]	850	2800
Linear speed, maximum	[m/s]	0,5	1,3
Dynamic carriage load (Fz), maximum	[N]	8250	38000
Remarks		no cover band, bellows or shrouds option available	no cover band, bellows or shrouds option available
Page		42	44

WM40S

Ball Screw Drive, Ball Guide, Single Ball Nut

» Ordering key - see page 194
» Accessories - see page 127
» Additional data - see page 183

General Specifications

Parameter	WM40S
Profile size (w × h) [mm]	40 × 40
Type of screw	ball screw with single nut
Carriage sealing system	self-adjusting plastic cover band
Screw supports	included in all units that require screw supports
Lubrication	central lubrication of all parts that require lubrication
Included accessories	4 × mounting clamps

Performance Specifications

Parameter		WM40S
Stroke length (S max), maximum	[mm]	2000
Linear speed, maximum	[m/s]	0,25
Acceleration, maximum	[m/s²]	20
Repeatability	[± mm]	0,02
Input speed, maximum	[rpm]	3000
Operation temperature limits	[°C]	0 – 80
Dynamic load (Fx), maximum	[N]	1000
Dynamic load (Fy), maximum	[N]	450[1] / 5300[2]
Dynamic load (Fz), maximum	[N]	600[1] / 6790[2]
Dynamic load torque (Mx), maximum	[Nm]	10[1] / 30[2]
Dynamic load torque (My), maximum	[Nm]	30[1] / 230[2]
Dynamic load torque (Mz), maximum	[Nm]	30[1] / 230[2]
Drive shaft force (Frd), maximum	[N]	100
Drive shaft torque (Mta), maximum	[Nm]	3
Ball screw diameter (d_0)	[mm]	12
Ball screw lead (p)	[mm]	5
Weight	[kg]	
of unit with zero stroke		1,50
of every 100 mm of stroke		0,30
of each carriage		0,36

[1] Value for the complete unit
[2] Value for the ball guide only

Carriage Idle Torque (M idle) [Nm]

Input speed [rpm]	Screw lead [mm]
	p = 5
150	0,3
1500	0,5
3000	0,8

M idle = the input torque needed to move the carriage with no load on it.

Deflection of the Profile

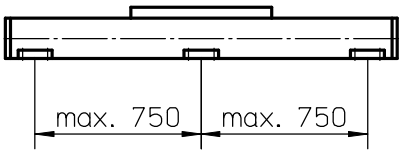

A mounting clamp must be installed at least at every 750 mm to be able to operate the maximum load. Less clamps may be required if less load is being operated, see the additional technical data for more information.

Critical Speed

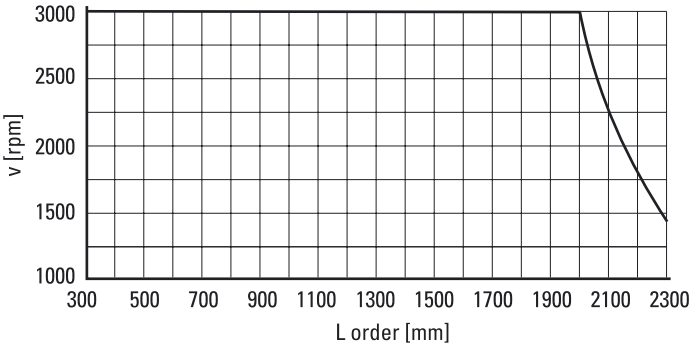

Definition of Forces

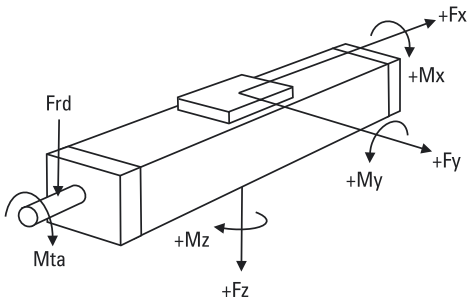

WM40S

Ball Screw Drive, Ball Guide, Single Ball Nut

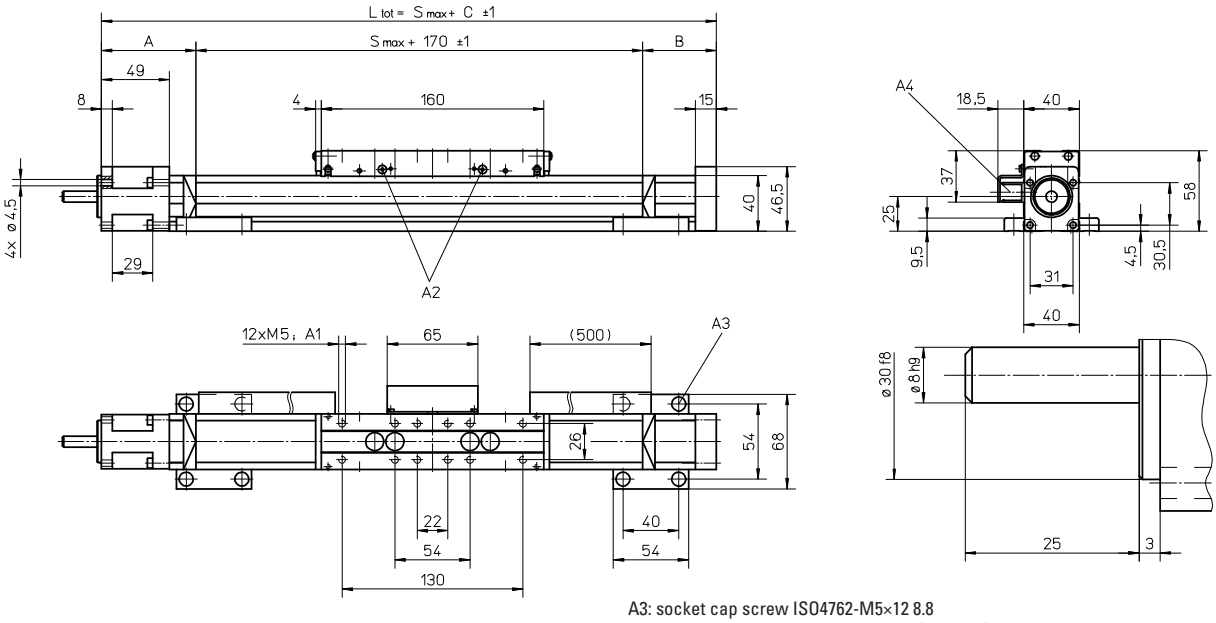

A1: depth 7
A2: lubricating nipple on both sides DIN3405 D 1/A
A3: socket cap screw ISO4762-M5×12 8.8
A4: ENF inductive sensor rail option kit (optional)

Stroke length (S max) [mm]	A [mm]	B [mm]	C [mm]
0 – 500 (0 – 450)	65	35	270 (320)
501 – 1100 (451 – 1050)	65	45	280 (330)
1101 – 2000 (1051 – 1950)	70	60	300 (350)

Values between brackets = for units with long carriage

Long Carriage

Parameter		WM40S
Carriage length	[mm]	210
Dynamic load torque (My), maximum	[Nm]	50
Dynamic load torque (Mz), maximum	[Nm]	50
Weight	[kg]	0,55

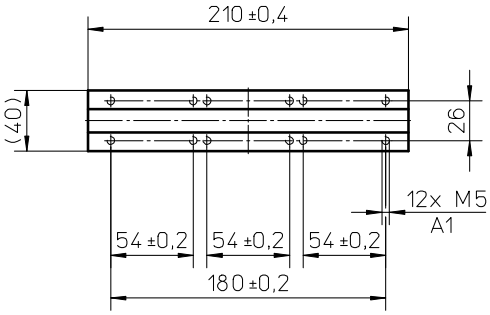

A1: depth 6

Double Carriages

Parameter		WM40S
Minimum distance between carriages (L_A)	[mm]	175
Dynamic load (Fy), maximum	[N]	900
Dynamic load (Fz), maximum	[N]	1200
Dynamic load torque (My), maximum	[Nm]	L_A[1] × 0,45
Dynamic load torque (Mz), maximum	[Nm]	L_A[1] × 0,6
Force required to move second carriage	[N]	40
Total length (L tot)	[mm]	S max + C + L_A

[1] Value in mm

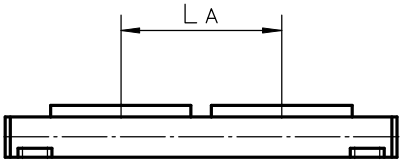

WM40D

Ball Screw Drive, Ball Guide, Double Ball Nuts, Long Carriage

» Ordering key - see page 194
» Accessories - see page 127
» Additional data - see page 183

General Specifications

Parameter	WM40D
Profile size (w × h) [mm]	40 × 40
Type of screw	ball screw with double nuts
Carriage sealing system	self-adjusting plastic cover band
Screw supports	included in all units that require screw supports
Lubrication	central lubrication of all parts that require lubrication
Included accessories	4 × mounting clamps

Performance Specifications

Parameter		WM40D
Stroke length (S max), maximum	[mm]	1950
Linear speed, maximum	[m/s]	0,25
Acceleration, maximum	[m/s²]	20
Repeatability	[± mm]	0,01
Input speed, maximum	[rpm]	3000
Operation temperature limits	[°C]	0 – 80
Dynamic load (Fx), maximum	[N]	1000
Dynamic load (Fy), maximum	[N]	450[1] / 5300[2]
Dynamic load (Fz), maximum	[N]	600[1] / 6790[2]
Dynamic load torque (Mx), maximum	[Nm]	10[1] / 30[2]
Dynamic load torque (My), maximum	[Nm]	30[1] / 230[2]
Dynamic load torque (Mz), maximum	[Nm]	30[1] / 230[2]
Drive shaft force (Frd), maximum	[N]	100
Drive shaft torque (Mta), maximum	[Nm]	3
Ball screw diameter (d_0)	[mm]	12
Ball screw lead (p)	[mm]	5
Weight	[kg]	
of unit with zero stroke		1,90
of every 100 mm of stroke		0,30
of each carriage		0,60

[1] Value for the complete unit
[2] Value for the ball guide only

Carriage Idle Torque (M idle) [Nm]

Input speed [rpm]	Screw lead [mm]
	p = 5
150	0,4
1500	0,6
3000	0,9

M idle = the input torque needed to move the carriage with no load on it.

Deflection of the Profile

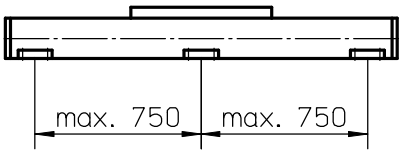

A mounting clamp must be installed at least at every 750 mm to be able to operate the maximum load. Less clamps may be required if less load is being operated, see the additional technical data for more information.

Critical Speed

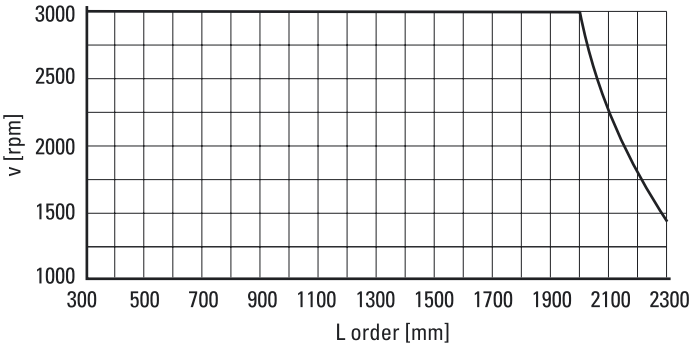

Definition of Forces

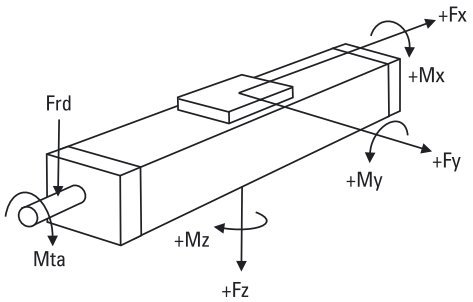

WM40D

Ball Screw Drive, Ball Guide, Double Ball Nuts, Long Carriage

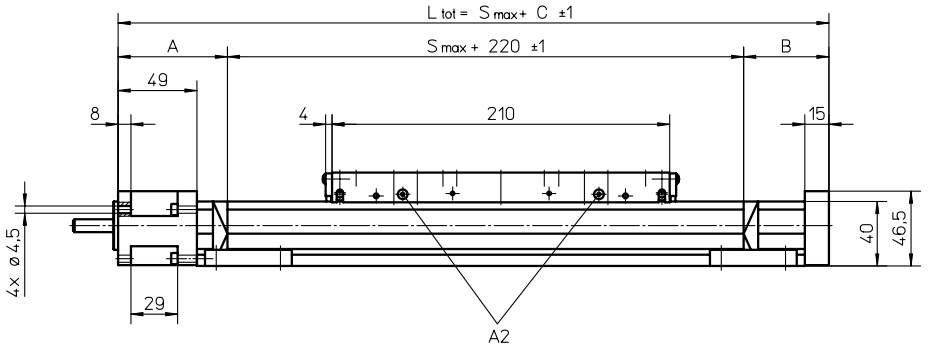

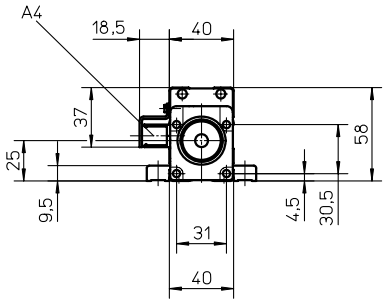

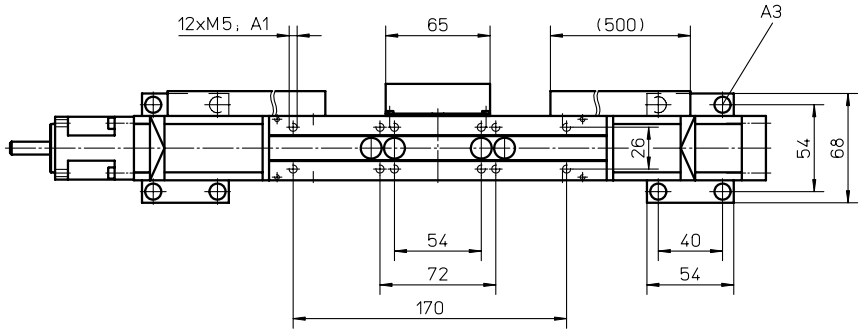

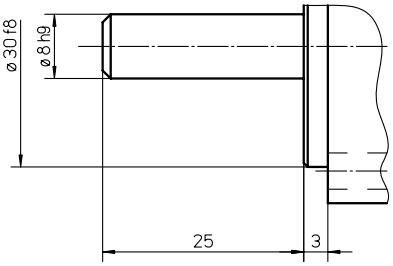

A1: depth 6
A2: lubricating nipple on both sides DIN3405 D 1/A
A3: socket cap screw ISO4762-M5×12 8.8
A4: ENF inductive sensor rail option kit (optional)

Stroke length (S max) [mm]	A [mm]	B [mm]	C [mm]
0 – 500	65	35	320
501 – 1100	65	45	330
1101 – 2000	70	60	350

Double Long Carriages

Parameter		WM40D
Minimum distance between carriages (L_A)	[mm]	225
Dynamic load (Fy), maximum	[N]	900
Dynamic load (Fz), maximum	[N]	1200
Dynamic load torque (My), maximum	[Nm]	L_A[1] × 0,45
Dynamic load torque (Mz), maximum	[Nm]	L_A[1] × 0,6
Force required to move second carriage	[N]	40
Total length (L tot)	[mm]	S max + C + L_A

[1] Value in mm

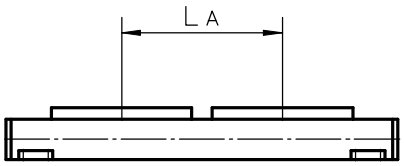

WM60D

Ball Screw Drive, Ball Guide, Double Ball Nuts

» Ordering key - see page 194
» Accessories - see page 127
» Additional data - see page 183

General Specifications

Parameter	WM60D
Profile size (w × h) [mm]	60 × 60
Type of screw	ball screw with double nut
Carriage sealing system	self-adjusting plastic cover band
Screw supports	included in all units that require screw supports
Lubrication	central lubrication of all parts that require lubrication
Included accessories	4 × mounting clamps

Performance Specifications

Parameter		WM60D
Stroke length (S max), maximum screw lead 5, 20 mm screw lead 50 mm	[mm]	 11000 5000
Linear speed, maximum	[m/s]	2,5
Acceleration, maximum	[m/s²]	20
Repeatability	[± mm]	0,01
Input speed, maximum	[rpm]	3000
Operation temperature limits	[°C]	0 – 80
Dynamic load (Fx), maximum	[N]	4000
Dynamic load (Fy), maximum	[N]	2000[1] / 45980[2]
Dynamic load (Fz), maximum	[N]	2000[1] / 42320[2]
Dynamic load torque (Mx), maximum	[Nm]	100[1] / 740[2]
Dynamic load torque (My), maximum	[Nm]	200[1] / 2990[2]
Dynamic load torque (Mz), maximum	[Nm]	200[1] / 3250[2]
Drive shaft force (Frd), maximum	[N]	500
Drive shaft torque (Mta), maximum	[Nm]	35
Ball screw diameter (d_0)	[mm]	20
Ball screw lead (p)	[mm]	5, 20, 50
Weight of unit with zero stroke of every 100 mm of stroke of each carriage	[kg]	 6,16 0,65 1,99

[1] Value for the complete unit
[2] Value for the ball guide only

Carriage Idle Torque (M idle) [Nm]

Input speed [rpm]	Screw lead [mm]		
	p = 5	p = 20	p = 50
150	0,8	1,3	1,6
1500	1,4	2,0	2,4
3000	1,8	2,3	2,6

M idle = the input torque needed to move the carriage with no load on it.

Deflection of the Profile

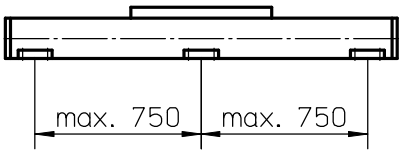

A mounting clamp must be installed at least at every 750 mm to be able to operate the maximum load. Less clamps may be required if less load is being operated, see the additional technical data for more information. Units with a profile length over 6300 mm consists of two profiles where the joint between the two profiles must be addequately supported on both sides.

Definition of Forces

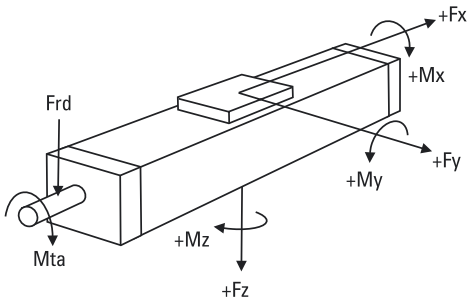

WM60D

Ball Screw Drive, Ball Guide, Double Ball Nuts

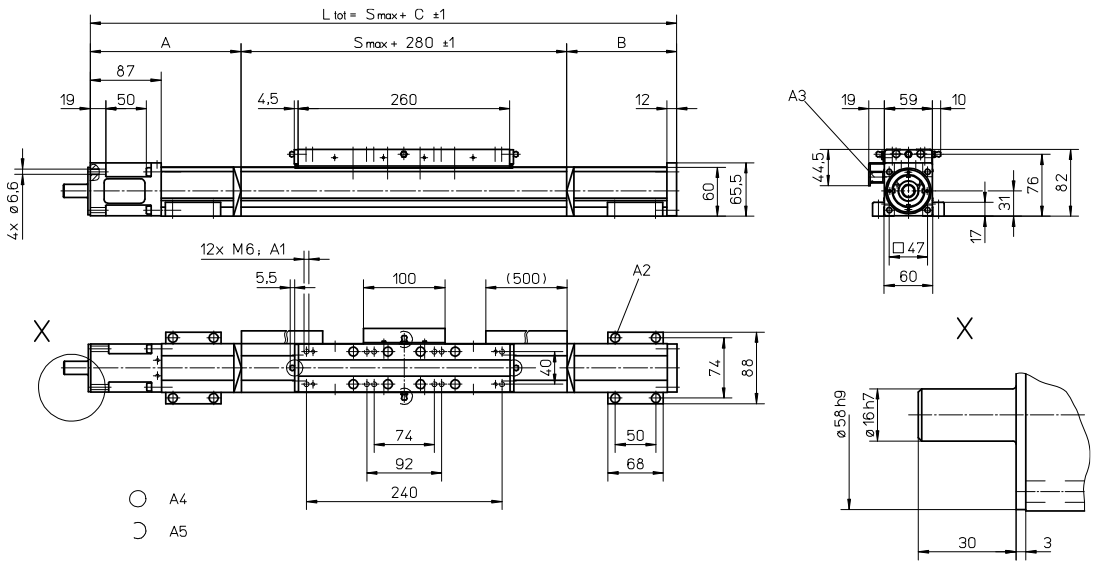

A1: depth 11
A2: socket cap screw ISO4762-M6×20 8.8
A3: ENF inductive sensor rail option kit (optional)

A4: tapered lubricating nipple to DIN71412 AM6 on fixed-bearing side as standard feature
A5: can be changed over to one of the three alternative lubricating points by the customer

Stroke length (S max) [mm]	A [mm]	B [mm]	C [mm]
0 - 695 (0 - 505)	115	65	460 (650)
696 - 1335 (506 - 1145)	165	115	560 (750)
1336 - 2075 (1146 - 1885)	185	135	600 (790)
2076 - 2780 (1886 - 2590)	210	160	650 (840)

Values between brackets = for units with long carriage

Stroke length (S max) [mm]	A [mm]	B [mm]	C [mm]
2781 - 3545 (2591 - 3355)	230	180	690 (880)
3546 - 4285 (3366 - 4095)	250	200	730 (920)
4286 - 5015 (4096 - 4825)	275	225	780 (970)
5016 - 11000 (4826 - 10810)	contact customer service		

Long Carriage

Parameter		WM60D
Carriage length	[mm]	450
Dynamic load torque (My), maximum	[Nm]	500
Dynamic load torque (Mz), maximum	[Nm]	500
Weight	[kg]	3,1

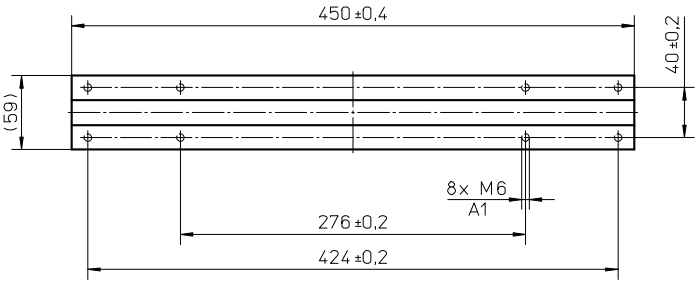

A1: depth 11

Double Carriages

Parameter		WM60D
Minimum distance between carriages (L_A)	[mm]	335
Dynamic load (Fy), maximum	[N]	4000
Dynamic load (Fz), maximum	[N]	4000
Dynamic load torque (My), maximum	[Nm]	L_A[1] × 2
Dynamic load torque (Mz), maximum	[Nm]	L_A[1] × 2
Force required to move second carriage	[N]	200
Total length (L tot)	[mm]	S max + C + L_A

[1] Value in mm

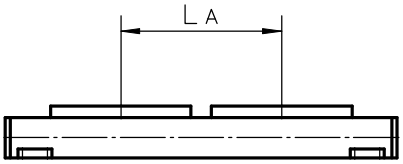

WM60S

Ball Screw Drive, Ball Guide, Single Ball Nut, Short Carriage

» Ordering key - see page 194
» Accessories - see page 127
» Additional data - see page 183

General Specifications

Parameter	WM60S
Profile size (w × h) [mm]	60 × 60
Type of screw	ball screw with single nut
Carriage sealing system	self adjusting plastic cover band
Screw supports	included in all units that require screw supports
Lubrication	central lubrication of all parts that require lubrication
Included accessories	4 × mounting clamps

Performance Specifications

Parameter		WM60S
Stroke length (S max), maximum	[mm]	5000
Linear speed, maximum	[m/s]	2,5
Acceleration, maximum	[m/s²]	10
Repeatability	[± mm]	0,02
Input speed, maximum	[rpm]	3000
Operation temperature limits	[°C]	0 – 80
Dynamic load (Fx), maximum	[N]	2800
Dynamic load (Fy), maximum	[N]	1400[1] / 25920[2]
Dynamic load (Fz), maximum	[N]	1400[1] / 23860[2]
Dynamic load torque (Mx), maximum	[Nm]	50[1] / 410[2]
Dynamic load torque (My), maximum	[Nm]	100[1] / 320[2]
Dynamic load torque (Mz), maximum	[Nm]	100[1] / 320[2]
Drive shaft force (Frd), maximum	[N]	500
Drive shaft torque (Mta), maximum	[Nm]	35
Ball screw diameter (d0)	[mm]	20
Ball screw lead (p)	[mm]	5, 20, 50
Weight	[kg]	
of unit with zero stroke		3,80
of every 100 mm of stroke		0,65
of each carriage		1,00

[1] Value for the complete unit
[2] Value for the ball guide only

Carriage Idle Torque (M idle) [Nm]

Input speed [rpm]	Screw lead [mm]		
	p = 5	p = 20	p = 50
150	0,7	1,0	1,4
1500	1,1	1,6	2,0
3000	1,5	1,8	2,2

M idle = the input torque needed to move the carriage with no load on it.

Deflection of the Profile

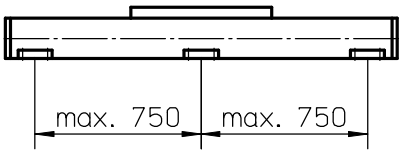

A mounting clamp must be installed at least at every 750 mm to be able to operate the maximum load. Less clamps may be required if less load is being operated, see the additional technical data for more information.

Definition of Forces

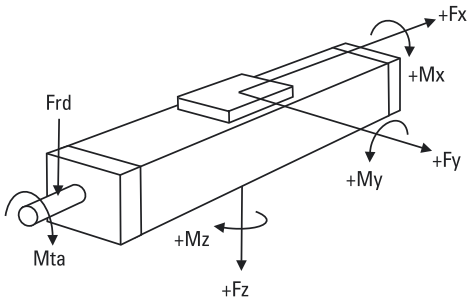

WM60S

Ball Screw Drive, Ball Guide, Single Ball Nut, Short Carriage

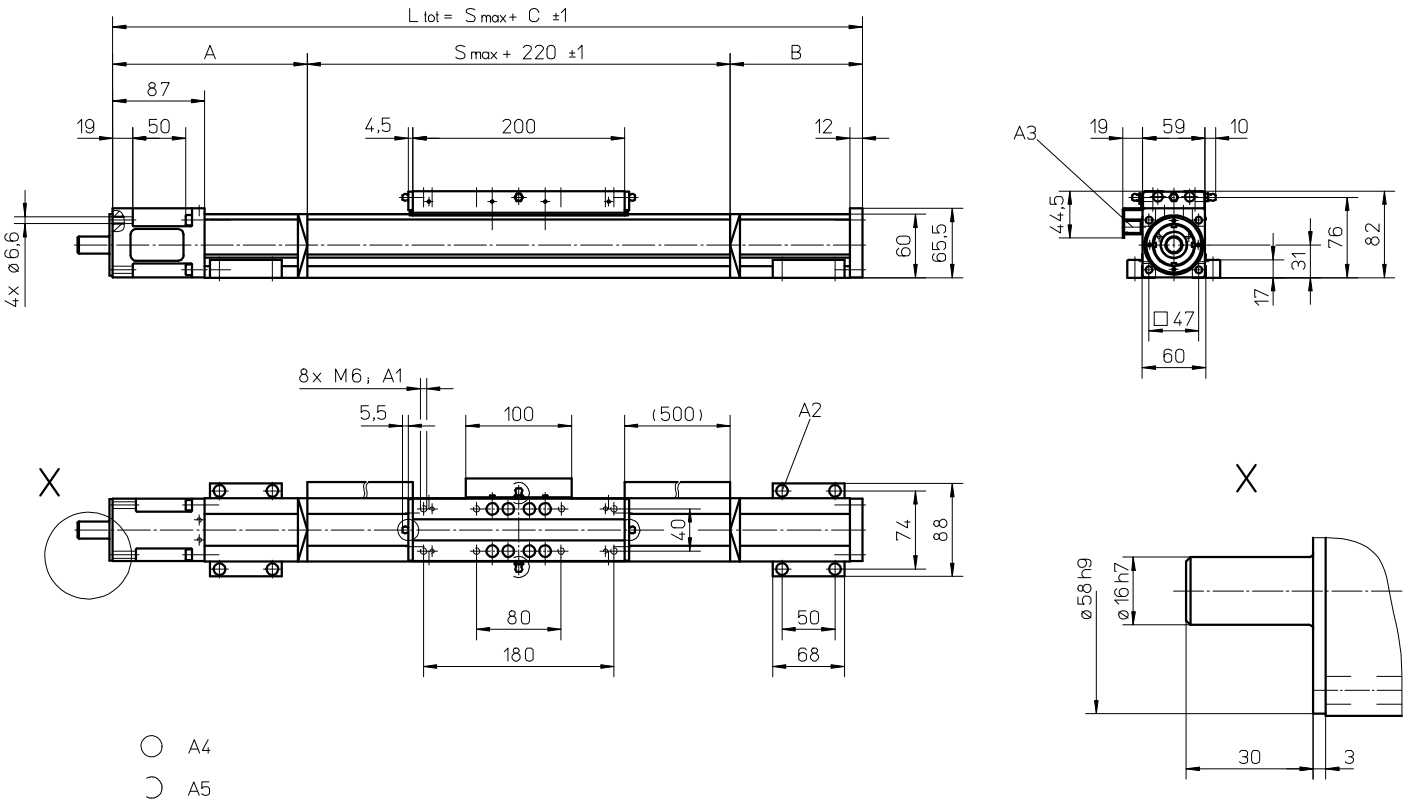

A1: depth 11
A2: socket cap screw ISO4762-M6×20 8.8
A3: ENF inductive sensor rail option kit (optional)

A4: tapered lubricating nipple to DIN71412 AM6 on fixed-bearing side as standard feature
A5: can be changed over to one of the three alternative lubricating points by the customer

Stroke length (S max) [mm]	A [mm]	B [mm]	C [mm]
0 - 580	95	20	335
581 - 1140	110	60	390
1141 - 1805	130	80	430
1806 - 2460	155	105	480

Stroke length (S max) [mm]	A [mm]	B [mm]	C [mm]
2461 - 3125	175	125	520
3126 - 3780	200	150	570
3781 - 4445	220	170	610
4446 - 5000	240	190	650

Double Short Carriages

Parameter		WM60S
Minimum distance between carriages (L_A)	[mm]	255
Dynamic load (Fy), maximum	[N]	2800
Dynamic load (Fz), maximum	[N]	2800
Dynamic load torque (My), maximum	[Nm]	L_A[1] × 1,4
Dynamic load torque (Mz), maximum	[Nm]	L_A[1] × 1,4
Force required to move second carriage	[N]	180
Total length (L tot)	[mm]	S max + C + L_A

[1] Value in mm

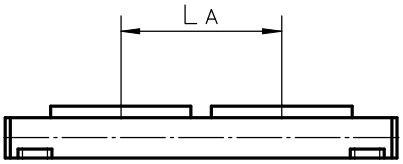

WM60X

Ball Screw Drive, Ball Guide, Left/right Moving Carriages

» Ordering key - see page 194
» Accessories - see page 127
» Additional data - see page 183

General Specifications

Parameter	WM60X
Profile size (w × h) [mm]	60 × 60
Type of screw	ball screw with double nut
Carriage sealing system	self adjusting plastic cover band
Screw supports	included in all units that require screw supports
Lubrication	central lubrication of all parts that require lubrication
Included accessories	4 × mounting clamps

Performance Specifications

Parameter		WM60X
Stroke length (S max), maximum	[mm]	10340
Linear speed, maximum	[m/s]	0,25
Acceleration, maximum	[m/s²]	20
Repeatability	[± mm]	0,01
Input speed, maximum	[rpm]	3000
Operation temperature limits	[°C]	0 – 80
Dynamic load (Fx), maximum	[N]	4000
Dynamic load (Fy), maximum	[N]	2000[1] / 45980[2]
Dynamic load (Fz), maximum	[N]	2000[1] / 42320[2]
Dynamic load torque (Mx), maximum	[Nm]	100[1] / 740[2]
Dynamic load torque (My), maximum	[Nm]	200[1] / 2990[2]
Dynamic load torque (Mz), maximum	[Nm]	200[1] / 3250[2]
Drive shaft force (Frd), maximum	[N]	500
Drive shaft torque (Mta), maximum	[Nm]	35
Ball screw diameter (do)	[mm]	20
Ball screw lead (p)	[mm]	5
Weight	[kg]	
of unit with zero stroke		10,33
of every 100 mm of stroke		0,65
of each carriage		1,99

[1] Value for the complete unit
[2] Value for the ball guide only

Carriage Idle Torque (M idle) [Nm]

Input speed [rpm]	Screw lead [mm]
	p = 5
150	1,6
1500	2,8
3000	3,6

M idle = the input torque needed to move the carriage with no load on it.

Deflection of the Profile

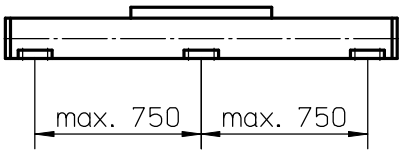

A mounting clamp must be installed at least at every 750 mm to be able to operate the maximum load. Less clamps may be required if less load is being operated, see the additional technical data for more information. Units with a profile length over 5400 mm consists of two profiles where the joint between the two profiles must be addequately supported on both sides.

Definition of Forces

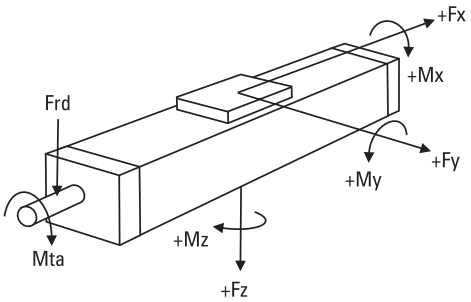

WM60X

Ball Screw Drive, Ball Guide, Left/right Moving Carriages

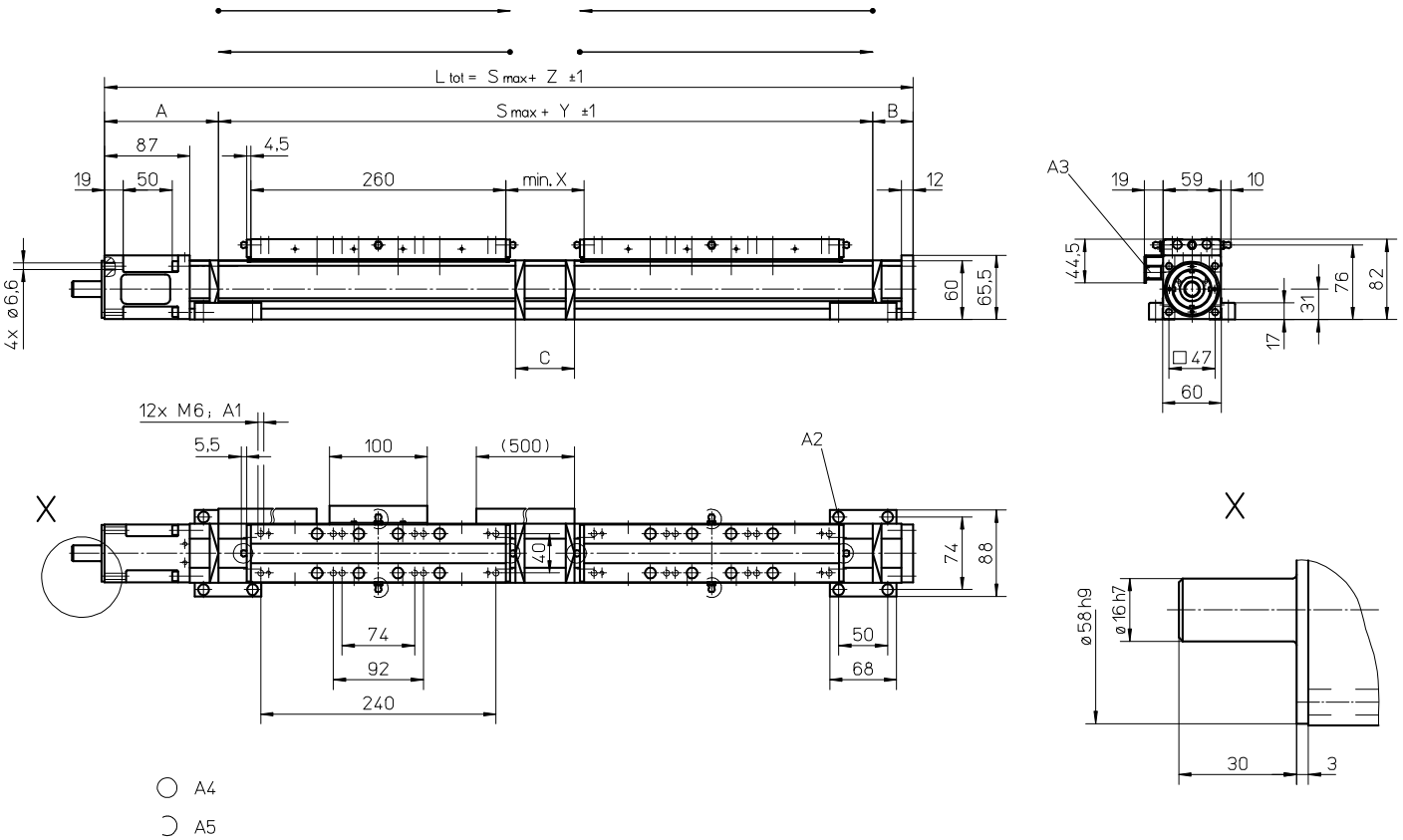

A1: depth 11
A2: socket cap screw ISO4762-M6×20 8.8
A3: ENF inductive sensor rail option kit (optional)

A4: tapered lubricating nipple to DIN71412 AM6 on fixed-bearing side as standard feature
A5: can be changed over to one of the three alternative lubricating points by the customer

Stroke length (S max) [mm]	A [mm]	B [mm]	C [mm]	X [mm]	Y [mm]	Z [mm]
0 - 1390 (0 - 1200)	115	65	60	80	620	800
1391 - 2670 (1201 - 2480)	165	115	210	230	770	1050
2671 - 4150 (2481 - 3960)	185	135	250	270	810	1130
4151 - 5560 (3961 - 5370)	210	160	300	320	860	1230
5561 - 10340 (5371 - 10150)	contact customer sevice					

Values between brackets = for units with long carriage

Long Carriage

Parameter		WM60X
Carriage length	[mm]	450
Dynamic load torque (My), maximum	[Nm]	500
Dynamic load torque (Mz), maximum	[Nm]	500
Weight	[kg]	3,1

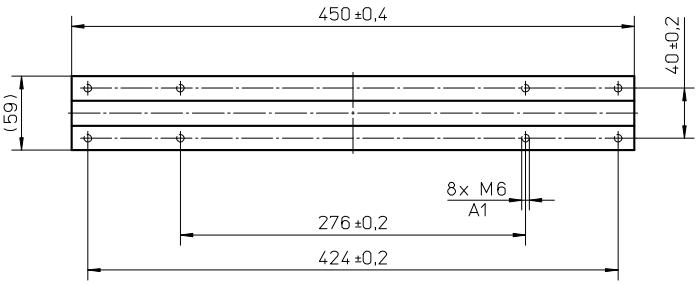

A1: depth 11

WM80D

Ball Screw Drive, Ball Guide, Double Ball Nuts

» Ordering key - see page 194
» Accessories - see page 127
» Additional data - see page 183

General Specifications

Parameter	WM80D
Profile size (w × h) [mm]	80 × 80
Type of screw	ball screw with double nuts
Carriage sealing system	self adjusting plastic cover band
Screw supports	included in all units that require screw supports
Lubrication	central lubrication of all parts that require lubrication
Included accessories	4 × mounting clamps

Performance Specifications

Parameter		WM80D
Stroke length (S max), maximum screw lead 5, 10, 20 mm screw lead 50 mm	[mm]	 11000 5000
Linear speed, maximum	[m/s]	2,5
Acceleration, maximum	[m/s²]	20
Repeatability	[± mm]	0,01
Input speed, maximum	[rpm]	3000
Operation temperature limits	[°C]	0 – 80
Dynamic load (Fx), maximum	[N]	5000
Dynamic load (Fy), maximum	[N]	3000[1] / 57420[2]
Dynamic load (Fz), maximum	[N]	3000[1] / 54950[2]
Dynamic load torque (Mx), maximum	[Nm]	350[1] / 1360[2]
Dynamic load torque (My), maximum	[Nm]	300[1] / 4230[2]
Dynamic load torque (Mz), maximum	[Nm]	300[1] / 4220[2]
Drive shaft force (Frd), maximum	[N]	700
Drive shaft torque (Mta), maximum	[Nm]	55
Ball screw diameter (d0)	[mm]	25
Ball screw lead (p)	[mm]	5, 10, 20, 50
Weight of unit with zero stroke of every 100 mm of stroke of each carriage	[kg]	 11,57 1,08 4,26

[1] Value for the complete unit
[2] Value for the ball guide only

Carriage Idle Torque (M idle) [Nm]

Input speed [rpm]	Screw lead [mm]			
	p = 5	p = 10	p = 20	p = 50
150	1,1	1,5	1,8	2,3
1500	1,7	2.1	2,3	3,0
3000	2,1	2,5	2,6	3,6

M idle = the input torque needed to move the carriage with no load on it.

Deflection of the Profile

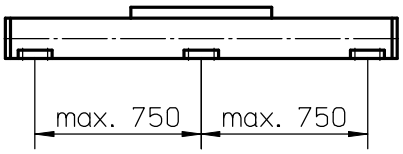

A mounting clamp must be installed at least at every 750 mm to be able to operate the maximum load. Less clamps may be required if less load is being operated, see the additional technical data for more information. Units with a profile length over 6300 mm consists of two profiles where the joint between the two profiles must be addequately supported on both sides.

Definition of Forces

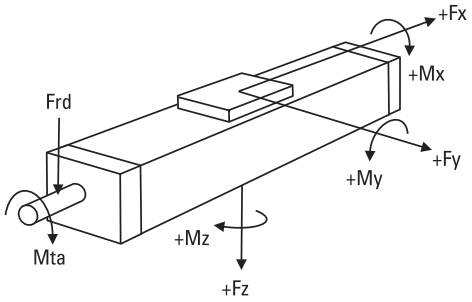

WM80D

Ball Screw Drive, Ball Guide, Double Ball Nuts

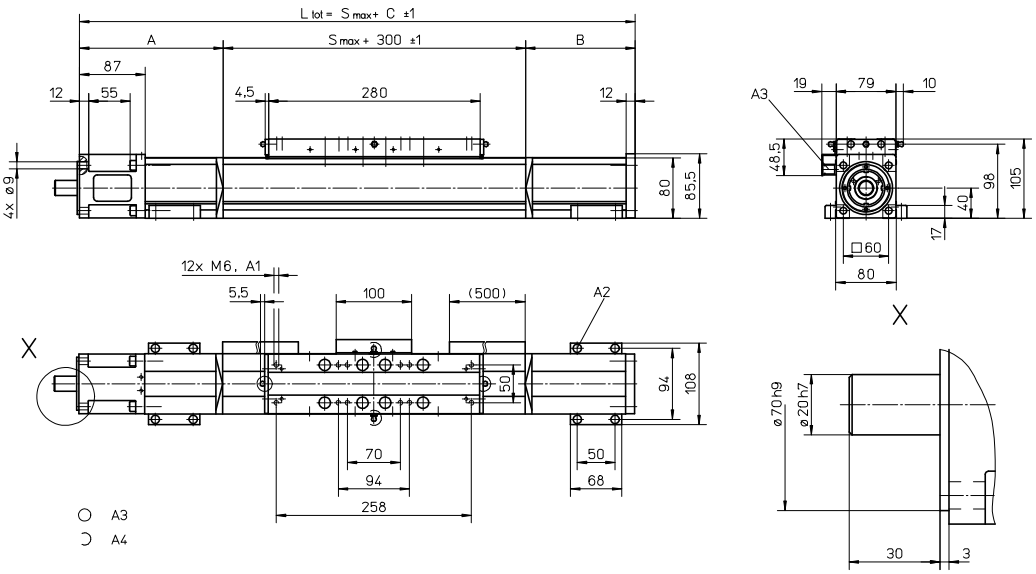

A1: depth 12 mm
A2: socket cap screw ISO4762-M6×20 8.8
A3: ENF inductive sensor rail option kit (optional)
A4: tapered lubricating nipple to DIN71412 AM6 on fixed-bearing side as standard feature
A5: can be changed over to one of three alternative lubrication points by customer

Stroke length (S max) [mm]	A [mm]	B [mm]	C [mm]
0 - 780 (0 - 610)	120	80	500 (670)
781 - 1535 (611 - 1365)	170	125	595 (765)
1536 - 2375 (1366 - 2205)	190	145	635 (805)
2376 - 3205 (2206 - 3035)	215	170	685 (855)

Values between brackets = for units with long carriage

Stroke length (S max) [mm]	A [mm]	B [mm]	C [mm]
3206 - 4045 (3036 - 3875)	235	190	725 (895)
4046 - 4885 (3876 - 4715)	255	210	765 (935)
4886 - 5000 (4716 - 4830)	280	235	815 (985)
5001 - 11000 (4717 - 10830)	contact customer service		

Long Carriage

Parameter		WM80D
Carriage length	[mm]	450
Dynamic load torque (My), maximum	[Nm]	750
Dynamic load torque (Mz), maximum	[Nm]	750
Weight	[kg]	6,4

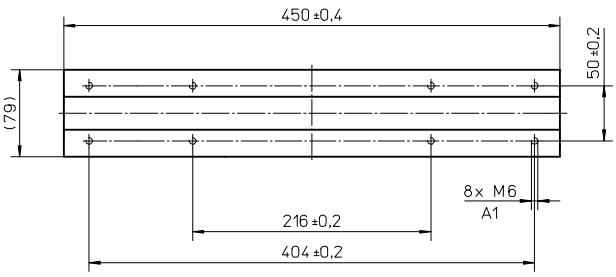

A1: depth 12 mm

Double Carriages

Parameter		WM80D
Minimum distance between carriages (L_A)	[mm]	360
Dynamic load (Fy), maximum	[N]	6000
Dynamic load (Fz), maximum	[N]	6000
Dynamic load torque (My), maximum	[Nm]	L_A[1] × 3
Dynamic load torque (Mz), maximum	[Nm]	L_A[1] × 3
Force required to move second carriage	[N]	250
Total length (L tot)	[mm]	S max + C + L_A

[1] Value in mm

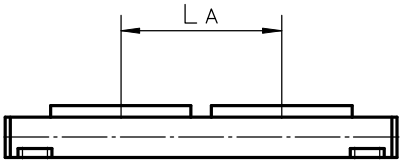

WM80S

Ball Screw Drive, Ball Guide, Singel Ball Nut, Short Carriage

» Ordering key - see page 194
» Accessories - see page 127
» Additional data - see page 183

General Specifications

Parameter	WM80S
Profile size (w × h) [mm]	80 × 80
Type of screw	ball screw with single nut
Carriage sealing system	self adjusting plastic cover band
Screw supports	included in all units that require screw supports
Lubrication	central lubrication of all parts that require lubrication
Included accessories	4 × mounting clamps

Performance Specifications

Parameter		WM80S
Stroke length (S max), maximum	[mm]	5000
Linear speed, maximum	[m/s]	2,5
Acceleration, maximum	[m/s²]	20
Repeatability	[± mm]	0,02
Input speed, maximum	[rpm]	3000
Operation temperature limits	[°C]	0 – 80
Dynamic load (Fx), maximum	[N]	3500
Dynamic load (Fy), maximum	[N]	2100[1] / 37440[2]
Dynamic load (Fz), maximum	[N]	2100[1] / 35830[2]
Dynamic load torque (Mx), maximum	[Nm]	150[1] / 890[2]
Dynamic load torque (My), maximum	[Nm]	180[1] / 580[2]
Dynamic load torque (Mz), maximum	[Nm]	180[1] / 600[2]
Drive shaft force (Frd), maximum	[N]	700
Drive shaft torque (Mta), maximum	[Nm]	55
Ball screw diameter (d0)	[mm]	25
Ball screw lead (p)	[mm]	5, 10, 20, 50
Weight	[kg]	
of unit with zero stroke		7,0
of every 100 mm of stroke		1,1
of each carriage		1,6

[1] Value for the complete unit
[2] Value for the ball guide only

Carriage Idle Torque (M idle) [Nm]

Input speed [rpm]	Screw lead [mm]			
	p = 5	p = 10	p = 20	p = 50
150	0,9	1,1	1,3	2,0
1500	1,3	1,5	1,8	2,4
3000	1,7	1,8	2,0	2,9

M idle = the input torque needed to move the carriage with no load on it.

Deflection of the Profile

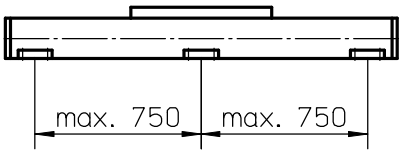

A mounting clamp must be installed at least at every 750 mm to be able to operate the maximum load. Less clamps may be required if less load is being operated, see the additional technical data for more information.

Definition of Forces

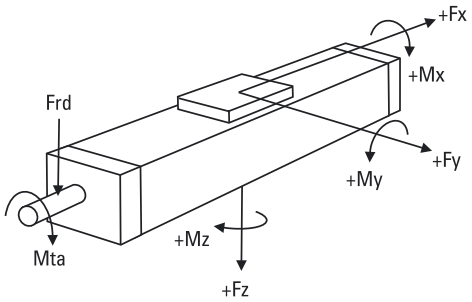

WM80S

Ball Screw Drive, Ball Guide, Singel Ball Nut, Short Carriage

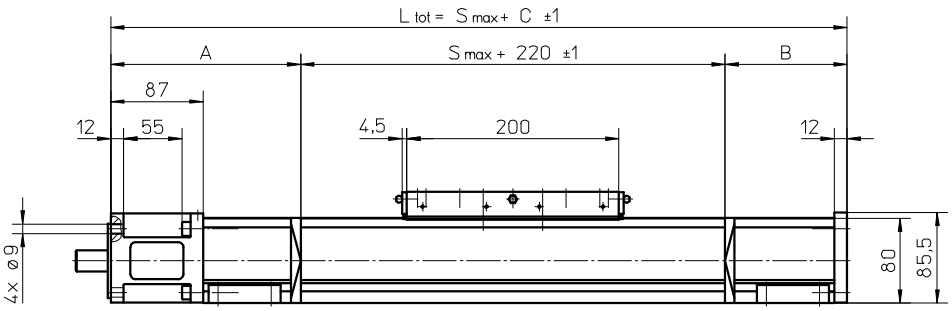

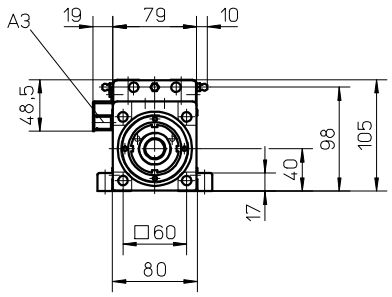

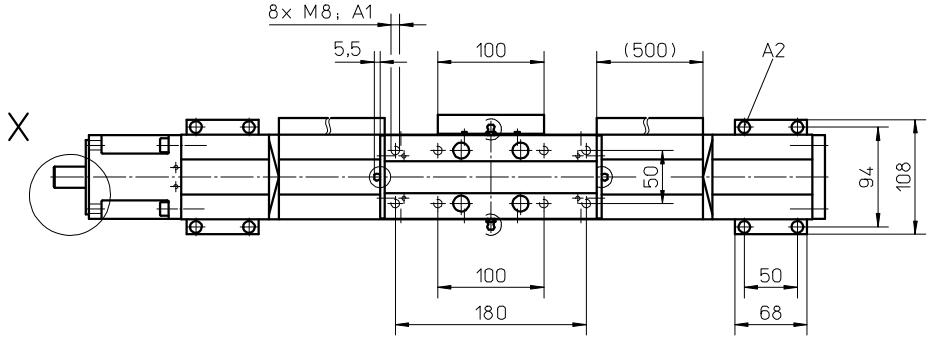

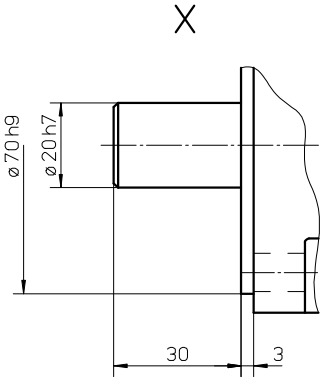

A4
A5

A1: depth 12 mm
A2: socket cap screw ISO4762-M6×20 8.8
A3: ENF inductive sensor rail option kit (optional)

A4: tapered lubricating nipple to DIN71412 AM6 on fixed-bearing side as standard feature
A5: can be changed over to one of three alternative lubrication points by customer

Stroke length (S max) [mm]	A [mm]	B [mm]	C [mm]
0 - 680	95	35	350
681 - 1310	125	80	425
1311 - 2065	150	105	475
2066 - 2830	170	125	515

Stroke length (S max) [mm]	A [mm]	B [mm]	C [mm]
2831 - 3590	195	150	565
3591 - 4355	215	170	605
4356 - 5000	235	190	645

Double Carriages

Parameter		WM80S
Minimum distance between carriages (LA)	[mm]	280
Dynamic load (Fy), maximum	[N]	4200
Dynamic load (Fz), maximum	[N]	4200
Dynamic load torque (My), maximum	[Nm]	L A[1] × 2,1
Dynamic load torque (Mz), maximum	[Nm]	L A[1] × 2,1
Force required to move second carriage	[N]	225
Total length (L tot)	[mm]	S max + C + L A

[1] Value in mm

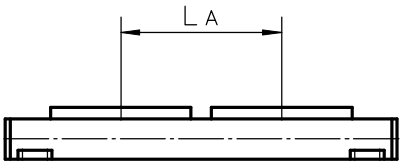

WM120D

Ball Screw Drive, Ball Guide, Double Ball Nuts

» Ordering key - see page 194
» Accessories - see page 127
» Additional data - see page 183

General Specifications

Parameter	WM120D
Profile size (w × h) [mm]	120 × 120
Type of screw	ball screw with double nuts
Carriage sealing system	self adjusting plastic cover band
Screw supports	included in all units that require screw supports
Lubrication	central lubrication of all parts that require lubrication
Included accessories	4 × mounting clamps

Performance Specifications

Parameter		WM120D
Stroke length (S max), maximum screw lead 5, 10, 20 mm screw lead 40 mm	[mm]	 11000 5000
Linear speed, maximum	[m/s]	2,0
Acceleration, maximum	[m/s²]	20
Repeatability	[± mm]	0,01
Input speed, maximum	[rpm]	3000
Operation temperature limits	[°C]	0 – 80
Dynamic load (Fx), maximum screw lead 5, 10, 20 mm screw lead 40 mm	[N]	 12000 8000
Dynamic load (Fy), maximum	[N]	6000[1] / 74890[2]
Dynamic load (Fz), maximum	[N]	6000[1] / 71670[2]
Dynamic load torque (Mx), maximum	[Nm]	500[1] / 2890[2]
Dynamic load torque (My), maximum	[Nm]	600[1] / 6660[2]
Dynamic load torque (Mz), maximum	[Nm]	600[1] / 6960[2]
Drive shaft force (Frd), maximum	[N]	1000
Drive shaft torque (Mta), maximum	[Nm]	80
Ball screw diameter (d_0)	[mm]	32
Ball screw lead (p)	[mm]	5, 10, 20, 40
Weight of unit with zero stroke of every 100 mm of stroke of each carriage	[kg]	 25,91 1,93 9,25

[1] Value for the complete unit
[2] Value for the ball guide only

Carriage Idle Torque (M idle) [Nm]

Input speed [rpm]	Screw lead [mm]			
	p = 5	p = 10	p = 20	p = 40
150	1,4	2,0	2,3	2,4
1500	2,5	3,0	3,3	3,8
3000	3,0	3,7	4,0	4,3

M idle = the input torque needed to move the carriage with no load on it.

Deflection of the Profile

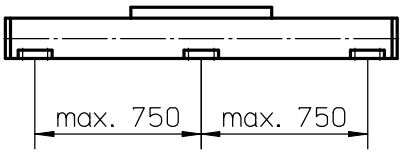

A mounting clamp must be installed at least at every 750 mm to be able to operate the maximum load. Less clamps may be required if less load is being operated, see the additional technical data for more information. Units with a profile length over 5400 mm consists of two profiles where the joint between the two profiles must be addequately supported on both sides.

Definition of Forces

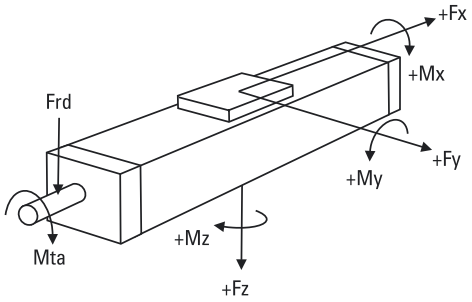

WM120D

Ball Screw Drive, Ball Guide, Double Ball Nuts

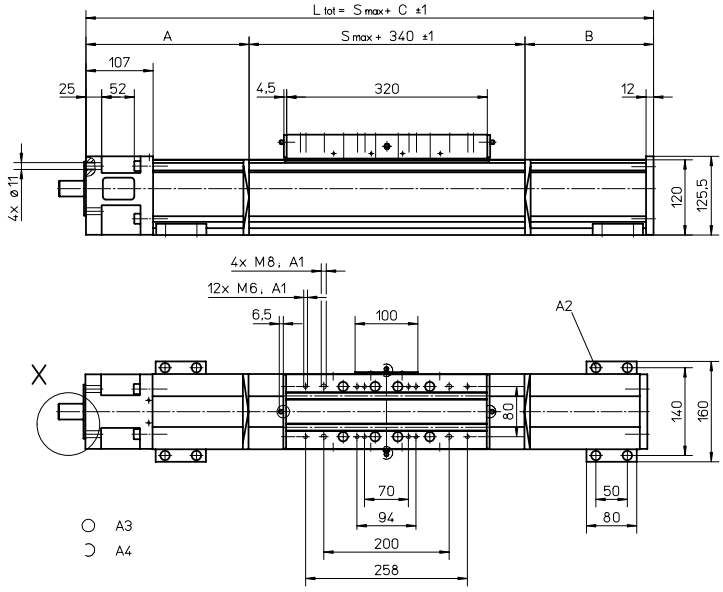

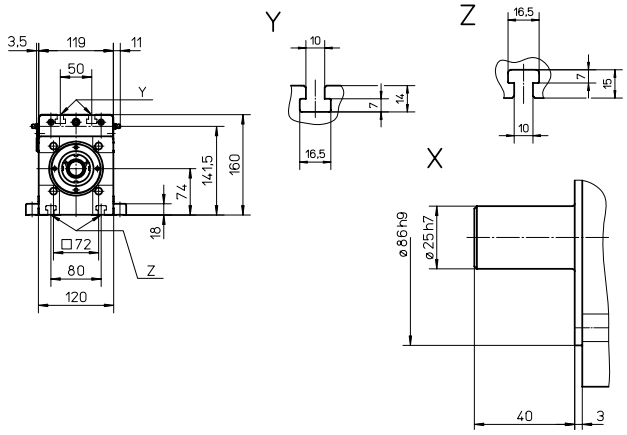

A1: depth 22
A2: socket cap screw ISO4762-M8×20 8.8
A3: tapered lubricating nipple to DIN71412 M8×1 on fixed-bearing side as standard feature
A4: can be changed over to one of the three alternative lubricating points by the customer

Stroke length (S max) [mm]	A [mm]	B [mm]	C [mm]
0 - 890 (0 - 710)	155	100	595 (775)
891 - 1695 (711 - 1515)	225	170	735 (815)
1696 - 2625 (1516 - 2445)	260	205	805 (985)
2626 - 3555 (2446 - 3375)	295	240	875 (1055)

Values between brackets = for units with long carriage

Stroke length (S max) [mm]	A [mm]	B [mm]	C [mm]
3556 - 4485 (3376 - 4305)	330	275	945 (1125)
4486 - 5000 (4306 - 4820)	365	310	1015 (1195)
5001 - 11000 (4307 - 10820)	contact customer service		

Long Carriage

Parameter		WM120D
Carriage length	[mm]	500
Dynamic load torque (My), maximum	[Nm]	1500
Dynamic load torque (Mz), maximum	[Nm]	1500
Weight	[kg]	14,2

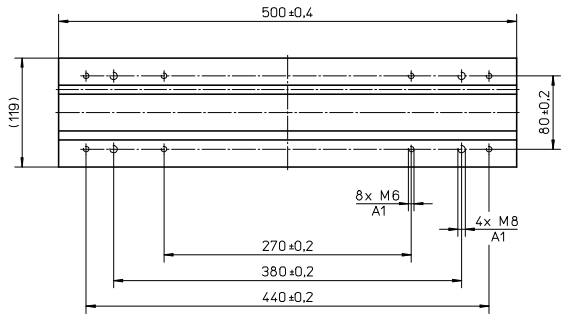

A1: depth 22

Double Carriages

Parameter		WM120D
Minimum distance between carriages (L_A)	[mm]	450
Dynamic load (Fy), maximum	[N]	12000
Dynamic load (Fz), maximum	[N]	12000
Dynamic load torque (My), maximum	[Nm]	L_A[1] × 6
Dynamic load torque (Mz), maximum	[Nm]	L_A[1] × 6
Force required to move second carriage	[N]	300
Total length (L tot)	[mm]	S max + C + L_A

[1] Value in mm

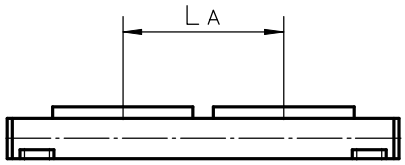

WV60

Ball Screw Drive, No Guides

» Ordering key - see page 195
» Accessories - see page 127
» Additional data - see page 183

General Specifications

Parameter	WV60
Profile size (w × h) [mm]	60 × 60
Type of screw	ball screw with double nut
Carriage sealing system	self-adjusting plastic cover band
Screw supports	included in all units that require screw supports
Lubrication	central lubrication of all parts that require lubrication
Included accessories	4 × mounting clamps

Performance Specifications

Parameter		WV60
Stroke length (S max), maximum screw lead 5, 20 mm screw lead 50 mm	[mm]	 11000 5000
Linear speed, maximum	[m/s]	2,5
Acceleration, maximum	[m/s²]	20
Repeatability	[± mm]	0,01
Input speed, maximum	[rpm]	3000
Operation temperature limits	[°C]	0 – 80
Dynamic load (Fx), maximum	[N]	4000
Dynamic load (Fy), maximum	[N]	0
Dynamic load (Fz), maximum	[N]	0
Dynamic load torque (Mx), maximum	[Nm]	0
Dynamic load torque (My), maximum	[Nm]	0
Dynamic load torque (Mz), maximum	[Nm]	0
Drive shaft force (Frd), maximum	[N]	500
Drive shaft torque (Mta), maximum	[Nm]	35
Ball screw diameter (d_0)	[mm]	20
Ball screw lead (p)	[mm]	5, 20, 50
Weight of unit with zero stroke of every 100 mm of stroke of each carriage	[kg]	 4,72 0,55 1,42

Carriage Idle Torque (M idle) [Nm]

Input speed [rpm]	Screw lead [mm]		
	p = 5	p = 20	p = 50
150	0,7	0,9	1,1
1500	1,3	1,5	1,5
3000	1,7	1,9	2,1

M idle = the input torque needed to move the carriage with no load on it.

Deflection of the Profile

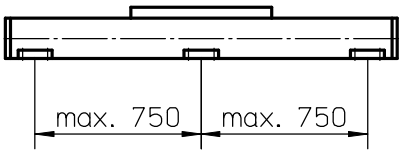

A mounting clamp must be installed at least at every 750 mm to be able to operate the maximum load. Less clamps may be required if less load is being operated, see the additional technical data for more information. Units with a profile length over 6300 mm consists of two profiles where the joint between the two profiles must be addequately supported on both sides.

Definition of Forces

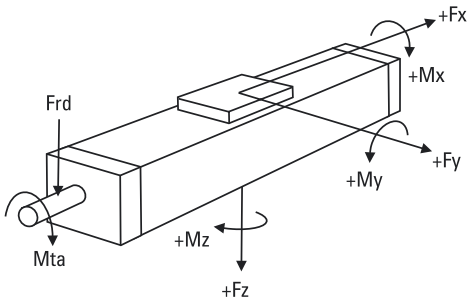

WV60

Ball Screw Drive, No Guides

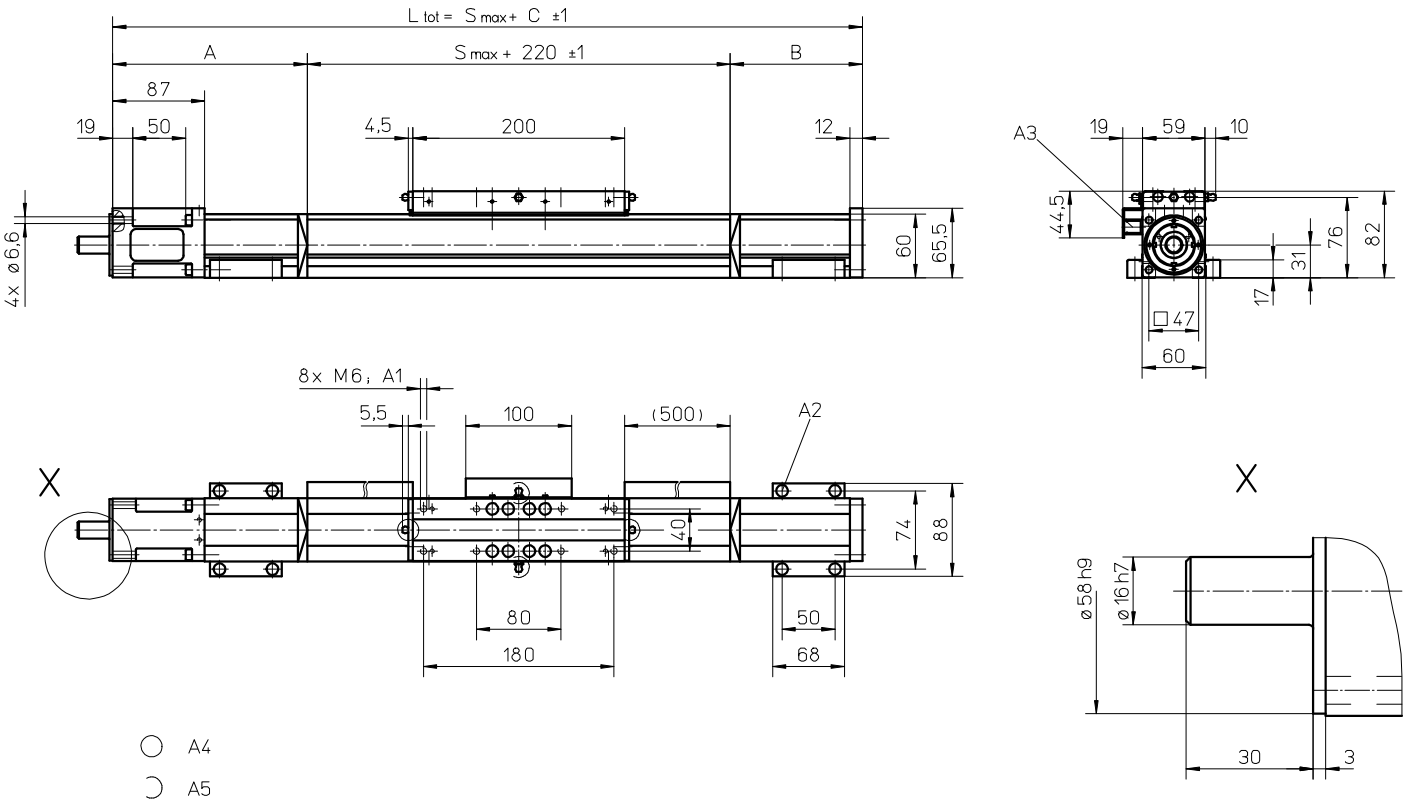

A1: depth 11
A2: socket cap screw ISO4762-M6×20 8.8
A3: ENF inductive sensor rail option kit (optional)

A4: tapered lubricating nipple to DIN71412 AM6 on fixed-bearing side as standard feature
A5: can be changed over to one of the three alternative lubricating points by the customer

Stroke length (S max) [mm]	A [mm]	B [mm]	C [mm]
0 - 690	130	80	430
691 - 1415	155	105	480
1416 - 2155	175	125	520
2156 - 2885	200	150	570

Stroke length (S max) [mm]	A [mm]	B [mm]	C [mm]
2886 - 3625	220	170	610
3626 - 4355	245	195	660
4256 - 5095	265	215	700
5096 - 11000	contact customer service		

WV80

Ball Screw Drive, No Guides

» Ordering key - see page 195
» Accessories - see page 127
» Additional data - see page 183

General Specifications

Parameter	WV80
Profile size (w × h) [mm]	80 × 80
Type of screw	ball screw with double nuts
Carriage sealing system	self adjusting plastic cover band
Screw supports	included in all units that require screw supports
Lubrication	central lubrication of all parts that require lubrication
Included accessories	4 × mounting clamps

Performance Specifications

Parameter		WV80
Stroke length (S max), maximum screw lead 5, 10, 20 mm screw lead 50 mm	[mm]	 11000 5000
Linear speed, maximum	[m/s]	2,5
Acceleration, maximum	[m/s²]	20
Repeatability	[± mm]	0,01
Input speed, maximum	[rpm]	3000
Operation temperature limits	[°C]	0 – 80
Dynamic load (Fx), maximum	[N]	5000
Dynamic load (Fy), maximum	[N]	0
Dynamic load (Fz), maximum	[N]	0
Dynamic load torque (Mx), maximum	[Nm]	0
Dynamic load torque (My), maximum	[Nm]	0
Dynamic load torque (Mz), maximum	[Nm]	0
Drive shaft force (Frd), maximum	[N]	700
Drive shaft torque (Mta), maximum	[Nm]	55
Ball screw diameter (d0)	[mm]	25
Ball screw lead (p)	[mm]	5, 10, 20, 50
Weight of unit with zero stroke of every 100 mm of stroke of each carriage	[kg]	 7,95 0,99 2,25

Carriage Idle Torque (M idle) [Nm]

Input speed [rpm]	Screw lead [mm]			
	p = 5	p = 10	p = 20	p = 50
150	0,9	1,1	1,3	1,4
1500	1,6	1,9	2,1	2,3
3000	2,0	2,4	2,6	3,0

M idle = the input torque needed to move the carriage with no load on it.

Deflection of the Profile

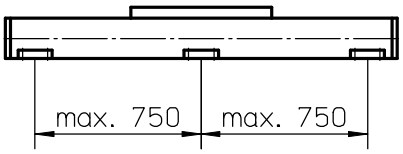

A mounting clamp must be installed at least at every 750 mm to be able to operate the maximum load. Less clamps may be required if less load is being operated, see the additional technical data for more information. Units with a profile length over 6300 mm consists of two profiles where the joint between the two profiles must be addequately supported on both sides.

Definition of Forces

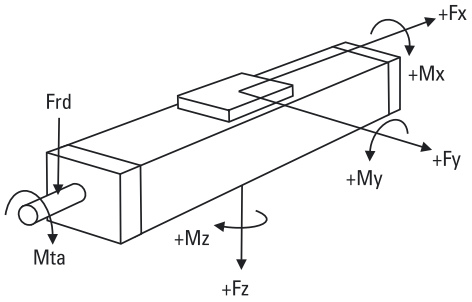

WV80

Ball Screw Drive, No Guides

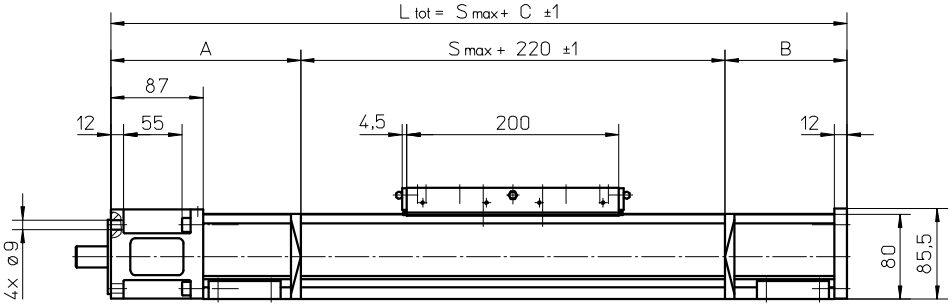

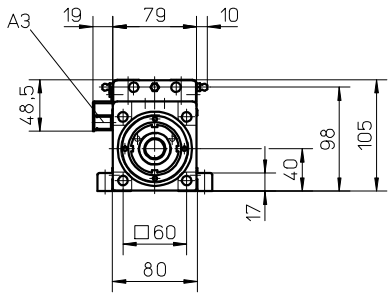

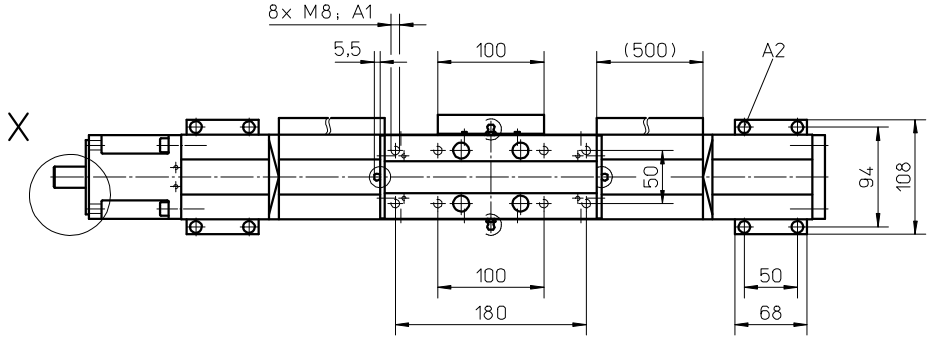

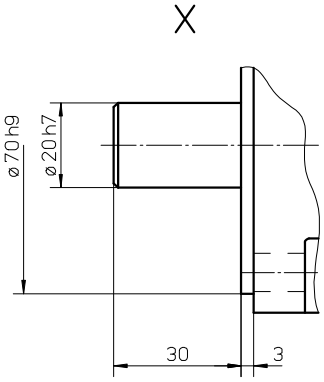

A1: depth 12 mm
A2: socket cap screw ISO4762-M6×20 8.8
A3: ENF inductive sensor rail option kit (optional)

A4: tapered lubricating nipple to DIN71412 AM6 on fixed-bearing side as standard feature
A5: can be changed over to one of three alternative lubrication points by customer

Stroke length (S max) [mm]	A [mm]	B [mm]	C [mm]
0 - 775	125	50	395
776 - 1670	145	95	460
1671 - 2505	170	115	505
2506 - 3340	190	140	550

Stroke length (S max) [mm]	A [mm]	B [mm]	C [mm]
3341 - 4175	210	160	590
4176 - 5015	235	180	635
5016 - 11000	contact customer service		

WV120

Ball Screw Drive, No Guides

» Ordering key - see page 195
» Accessories - see page 127
» Additional data - see page 183

General Specifications

Parameter	WV120
Profile size (w × h) [mm]	120 × 120
Type of screw	ball screw with double nuts
Carriage sealing system	self adjusting plastic cover band
Screw supports	included in all units that require screw supports
Lubrication	central lubrication of all parts that require lubrication
Included accessories	4 × mounting clamps

Performance Specifications

Parameter		WV120
Stroke length (S max), maximum screw lead 5, 10, 20 mm screw lead 40 mm	[mm]	 11000 5000
Linear speed, maximum	[m/s]	2,0
Acceleration, maximum	[m/s²]	20
Repeatability	[± mm]	0,01
Input speed, maximum	[rpm]	3000
Operation temperature limits	[°C]	0 – 80
Dynamic load (Fx), maximum screw lead 5, 10, 20 mm screw lead 40 mm	[N]	 12000 8000
Dynamic load (Fy), maximum	[N]	0
Dynamic load (Fz), maximum	[N]	0
Dynamic load torque (Mx), maximum	[Nm]	0
Dynamic load torque (My), maximum	[Nm]	0
Dynamic load torque (Mz), maximum	[Nm]	0
Drive shaft force (Frd), maximum	[N]	1000
Drive shaft torque (Mta), maximum	[Nm]	80
Ball screw diameter (d0)	[mm]	32
Ball screw lead (p)	[mm]	5, 10, 20, 40
Weight of unit with zero stroke of every 100 mm of stroke of each carriage	[kg]	 18,10 1,94 4,75

Carriage Idle Torque (M idle) [Nm]

Input speed [rpm]	Screw lead [mm]			
	p = 5	p = 10	p = 20	p = 40
150	1,0	1,1	1,4	1,5
1500	2,1	2,2	2,5	2,8
3000	2,4	2,6	3,0	3,5

M idle = the input torque needed to move the carriage with no load on it.

Deflection of the Profile

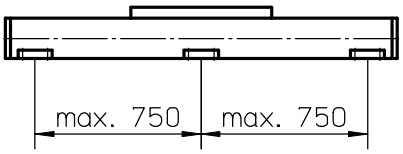

A mounting clamp must be installed at least at every 750 mm to be able to operate the maximum load. Less clamps may be required if less load is being operated, see the additional technical data for more information. Units with a profile length over 5400 mm consists of two profiles where the joint between the two profiles must be addequately supported on both sides.

Definition of Forces

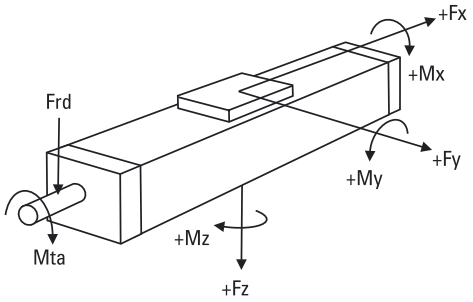

WV120

Ball Screw Drive, No Guides

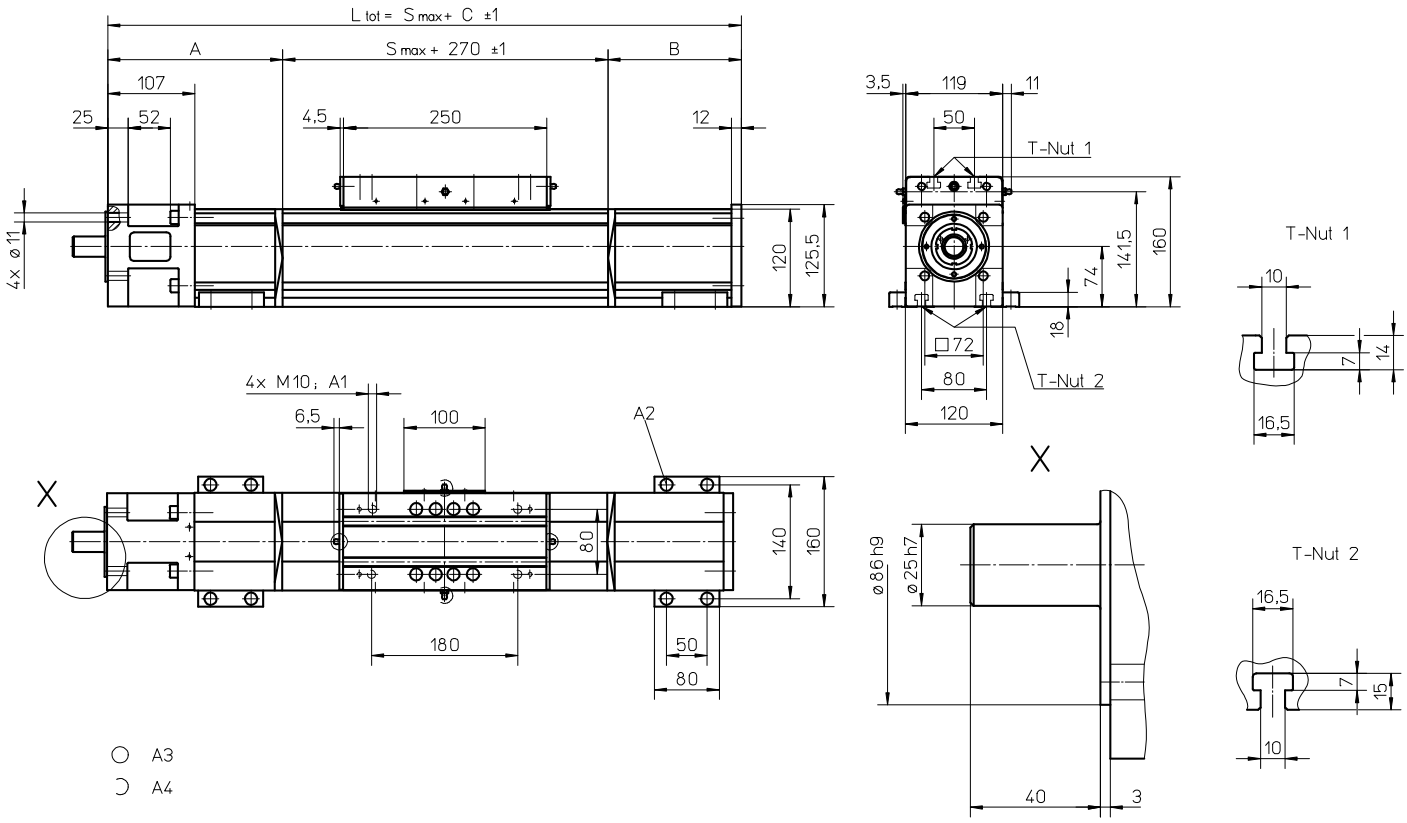

A1: depth 22
A2: socket cap screw ISO4762-M8×20 8.8

A3: tapered lubricating nipple to DIN71412 M8×1 on fixed-bearing side as standard feature
A4: can be changed over to one of the three alternative lubricating points by the customer

Stroke length (S max) [mm]	A [mm]	B [mm]	C [mm]
0 - 940	145	50	465
941 - 1860	180	120	570
1861 - 2790	215	155	640
2791 - 3720	250	190	710

Stroke length (S max) [mm]	A [mm]	B [mm]	C [mm]
3721 - 4650	285	225	780
4651 - 5000	320	255	845
5001 - 11000	contact customer service		

MLSM60D

Ball Screw Drive, Ball Guide

» Ordering key - see page 196
» Accessories - see page 127
» Additional data - see page 183

General Specifications

Parameter	MLSM60D
Profile size (w × h) [mm]	160 × 65
Type of screw	ball screw with double nuts
Carriage sealing system	plastic cover band
Screw supports	included in all units that require screw supports
Lubrication	central lubrication of all parts that require lubrication
Included accessories	4 × mounting clamps

Performance Specifications

Parameter		MLSM60D
Stroke length (S max), maximum	[mm]	5500
Linear speed, maximum	[m/s]	2,5
Acceleration, maximum	[m/s²]	20
Repeatability	[± mm]	0,01
Input speed, maximum	[rpm]	3000
Operation temperature limits	[°C]	0 – 80
Dynamic load (Fx), maximum	[N]	5000
Dynamic load (Fy), maximum	[N]	6000[1] / 55090[2]
Dynamic load (Fz), maximum	[N]	6000[1] / 55090[2]
Dynamic load torque (Mx), maximum	[Nm]	400[1] / 2890[2]
Dynamic load torque (My), maximum	[Nm]	460[1] / 4490[2]
Dynamic load torque (Mz), maximum	[Nm]	460[1] / 4490[2]
Drive shaft force (Frd), maximum	[N]	350
Drive shaft torque (Mta), maximum	[Nm]	60
Ball screw diameter (do)	[mm]	25
Ball screw lead (p)	[mm]	5, 10, 20, 50
Weight	[kg]	
of unit with zero stroke		14,40
of every 100 mm of stroke		1,65
of each carriage		5,70

[1] Value for the complete unit
[2] Value for the ball guide only

Carriage Idle Torque (M idle) [Nm]

Input speed [rpm]	Screw lead [mm]			
	p = 5	p = 10	p = 20	p = 50
150	1,0	1,6	1,9	2,7
1500	1,6	2,2	2,3	3,4
3000	2,0	2,6	2,6	4,0

M idle = the input torque needed to move the carriage with no load on it.

Deflection of the Profile

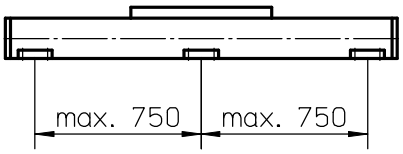

A mounting clamp must be installed at least at every 750 mm to be able to operate the maximum load. Less clamps may be required if less load is being operated, see the additional technical data for more information.

Definition of Forces

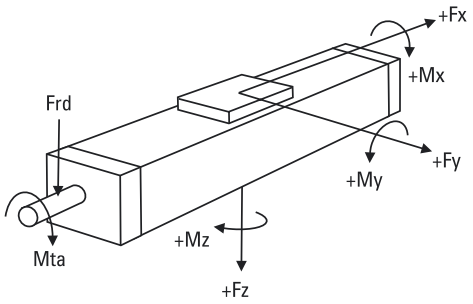

MLSM60D

Ball Screw Drive, Ball Guide

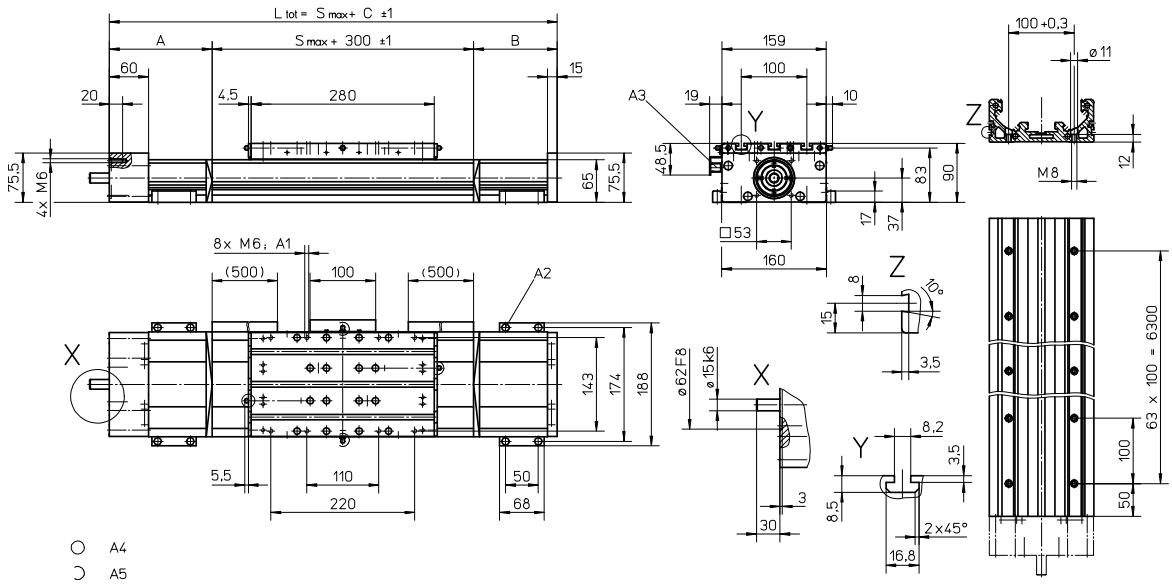

A1: depth 10
A2: socket cap screw ISO4762-M6×20 8.8
A3: ENF inductive sensor rail option kit (optional)

A4: tapered lubricating nipple to DIN71412 AM6 on fixed-bearing side as standard feature
A5: can be changed over to one of the three alternative lubricating points by the customer

Stroke length (S max) [mm]	A [mm]	B [mm]	C [mm]
0 - 750 (0 - 580)	90	45	435 (605)
751 - 1220 (581 - 1050)	105	90	495 (665)
1221 - 1980 (1051 - 1810)	125	110	535 (705)
1981 - 2730 (1811 - 2560)	150	135	585 (765)

Values between brackets = for units with long carriage

Stroke length (S max) [mm]	A [mm]	B [mm]	C [mm]
2731 - 3490 (2561 - 3320)	170	155	625 (795)
3491 - 4240 (3321 - 4070)	195	180	675 (845)
4241 - 5000 (4071 - 4830)	215	200	715 (885)
5001 - 5500 (4831 - 5330)	235	220	755 (925)

Long Carriage

Parameter		MLSM60D
Carriage length	[mm]	450
Dynamic load torque (My), maximum	[Nm]	940
Dynamic load torque (Mz), maximum	[Nm]	940
Weight	[kg]	6,5

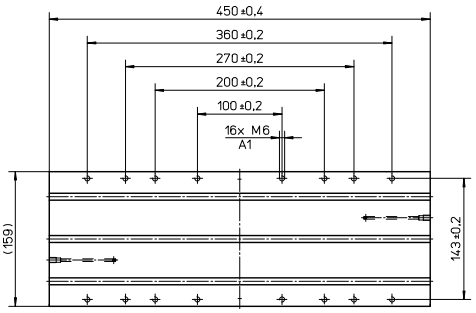

A1: depth 10

Double Carriages

Parameter		MLSM60D
Minimum distance between carriages (L_A)	[mm]	320
Dynamic load (Fy), maximum	[N]	12000
Dynamic load (Fz), maximum	[N]	12000
Dynamic load torque (My), maximum	[Nm]	L_A[1] × 6
Dynamic load torque (Mz), maximum	[Nm]	L_A[1] × 6
Force required to move second carriage	[N]	270
Total length (L tot)	[mm]	S max + C + L_A

[1] Value in mm

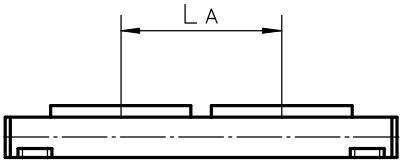

MLSM80D

Ball Screw Drive, Ball Guide

» Ordering key - see page 196
» Accessories - see page 127
» Additional data - see page 183

General Specifications

Parameter	MLSM80D
Profile size (w × h) [mm]	240 × 85
Type of screw	ball screw with double nuts
Carriage sealing system	plastic cover band
Screw supports	included in all units that require screw supports
Lubrication	central lubrication of all parts that require lubrication
Included accessories	4 × mounting clamps

Performance Specifications

Parameter		MLSM80D
Stroke length (S max), maximum	[mm]	5200
Linear speed, maximum	[m/s]	2,0
Acceleration, maximum	[m/s²]	20
Repeatability	[± mm]	0,01
Input speed, maximum	[rpm]	3000
Operation temperature limits	[°C]	0 – 80
Dynamic load (Fx), maximum screw lead 5, 10, 20 mm screw lead 40 mm	[N]	 12000 8000
Dynamic load (Fy), maximum	[N]	8000[1] / 71860[2]
Dynamic load (Fz), maximum	[N]	8000[1] / 71860[2]
Dynamic load torque (Mx), maximum	[Nm]	780[1] / 5890[2]
Dynamic load torque (My), maximum	[Nm]	900[1] / 6640[2]
Dynamic load torque (Mz), maximum	[Nm]	900[1] / 6640[2]
Drive shaft force (Frd), maximum	[N]	700
Drive shaft torque (Mta), maximum	[Nm]	85
Ball screw diameter (d0)	[mm]	32
Ball screw lead (p)	[mm]	5, 10, 20, 40
Weight of unit with zero stroke of every 100 mm of stroke of each carriage	[kg]	 29,5 2,7 11,5

[1] Value for the complete unit
[2] Value for the ball guide only

Carriage Idle Torque (M idle) [Nm]

Input speed [rpm]	Screw lead [mm]			
	p = 5	p = 10	p = 20	p = 40
150	1,6	2,2	2,5	2,8
1500	2,7	3,2	3,4	4,0
3000	3,2	4,0	4,2	4,5

M idle = the input torque needed to move the carriage with no load on it.

Deflection of the Profile

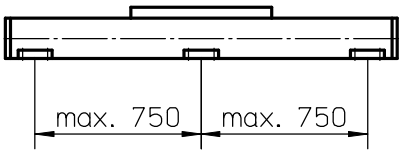

A mounting clamp must be installed at least at every 750 mm to be able to operate the maximum load. Less clamps may be required if less load is being operated, see the additional technical data for more information.

Definition of Forces

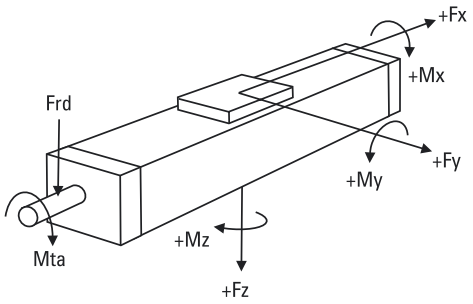

MLSM80D

Ball Screw Drive, Ball Guide

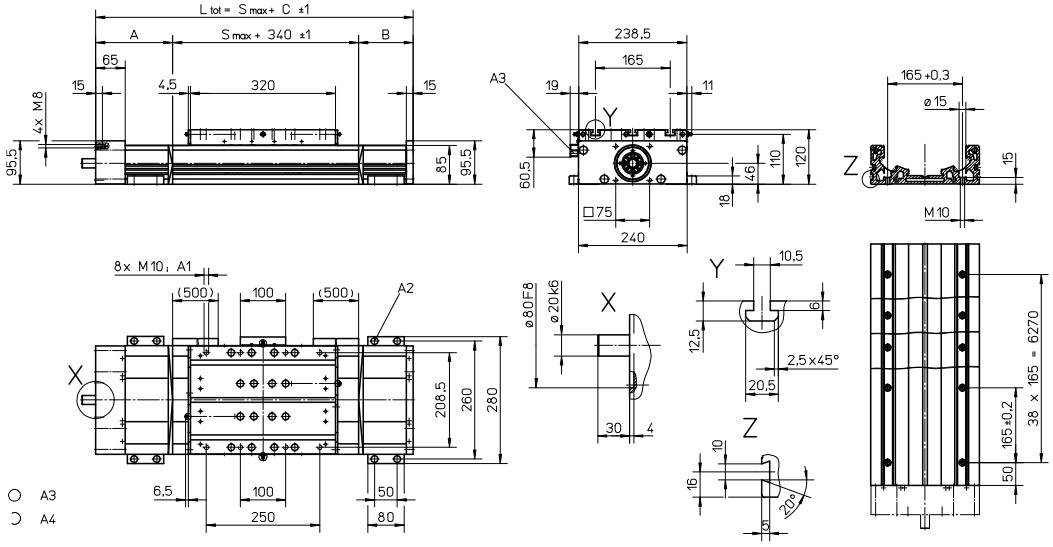

A1: depth 15
A2: socket cap screw ISO4762-M8×20 8.8
A3: ENF inductive sensor rail option kit (optional)
A4: tapered lubricating nipple to DIN71412 M8×1 on fixed-bearing side as standard feature
A5: can be changed over to one of the three alternative lubricating points by the customer

Stroke length (S max) [mm]	A [mm]	B [mm]	C [mm]
0 - 750 (0 - 570)	100	90	530 (710)
751 - 1140 (571 - 960)	130	120	590 (770)
1141 - 1880 (961 - 1700)	160	150	650 (830)
1881 - 2620 (1701 - 2440)	190	180	710 (890)

Stroke length (S max) [mm]	A [mm]	B [mm]	C [mm]
2621 - 3360 (2441 - 3180)	220	210	770 (950)
3361 - 4100 (3181 - 3920)	250	240	830 (1010)
4101 - 4840 (3921 - 4660)	280	270	890 (1070)
4841 - 5000 (4661 - 4820)	310	300	950 (1130)

Values between brackets = for units with long carriage

Long Carriage

Parameter		MLSM80D
Carriage length	[mm]	500
Dynamic load torque (My), maximum	[Nm]	1750
Dynamic load torque (Mz), maximum	[Nm]	1750
Weight	[kg]	16

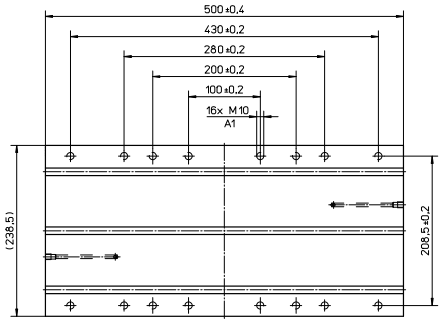

A1: depth 15

Double Carriages

Parameter		MLSM80D
Minimum distance between carriages (L_A)	[mm]	400
Dynamic load (Fy), maximum	[N]	16000
Dynamic load (Fz), maximum	[N]	16000
Dynamic load torque (My), maximum	[Nm]	L_A[1] × 8
Dynamic load torque (Mz), maximum	[Nm]	L_A[1] ×8
Force required to move second carriage	[N]	350
Total length (L tot)	[mm]	S max + C + L_A

[1] Value in mm

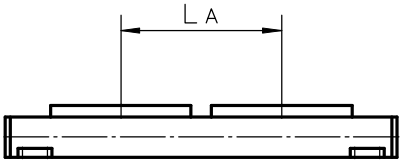

2HBE10

Ball Screw Drive, Ball Guide

» Ordering key - see page 197
» Accessories - see page 127
» Additional data - see page 183

General Specifications

Parameter	2HBE10
Profile size (w × h) [mm]	100 × 33,5
Type of screw	ball screw with double nut
Carriage sealing system	none
Screw supports	none
Lubrication	lubrication of screw and guides
Included accessories	none

Performance Specifications

Parameter		2HBE10
Stroke length (S max), maximum	[mm]	850
Linear speed, maximum	[m/s]	0,5
Acceleration, maximum	[m/s²]	20
Repeatability	[± mm]	0,005
Input speed, maximum	[rpm]	3000
Operation temperature limits	[°C]	-20 – 70
Dynamic load (Fx), maximum	[N]	2500
Dynamic load (Fy), maximum	[N]	8250[1] / 2065[2]
Dynamic load (Fz), maximum	[N]	8250[1] / 2065[2]
Dynamic load torque (Mx), maximum	[Nm]	290[1] / 395[2]
Dynamic load torque (My), maximum	[Nm]	225[1] / 305[2]
Dynamic load torque (Mz), maximum	[Nm]	225[1] / 305[2]
Drive shaft force (Frd), maximum	[N]	0
Drive shaft torque (Mta), maximum	[Nm]	4,4
Ball screw diameter (d0)	[mm]	16
Ball screw lead (p)	[mm]	5, 10
Weight	[kg]	
of unit with zero stroke		-
of every 100 mm of stroke		-
of each carriage		0,4

[1] Value for the complete unit
[2] Value for the ball guide only

Deflection of the Profile

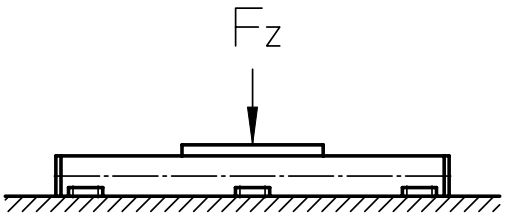

The unit must be continiously supported by a machined surface under its entire lenght.

Definition of Forces

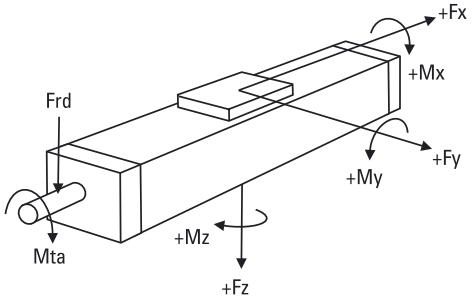

2HBE10

Ball Screw Drive, Ball Guide

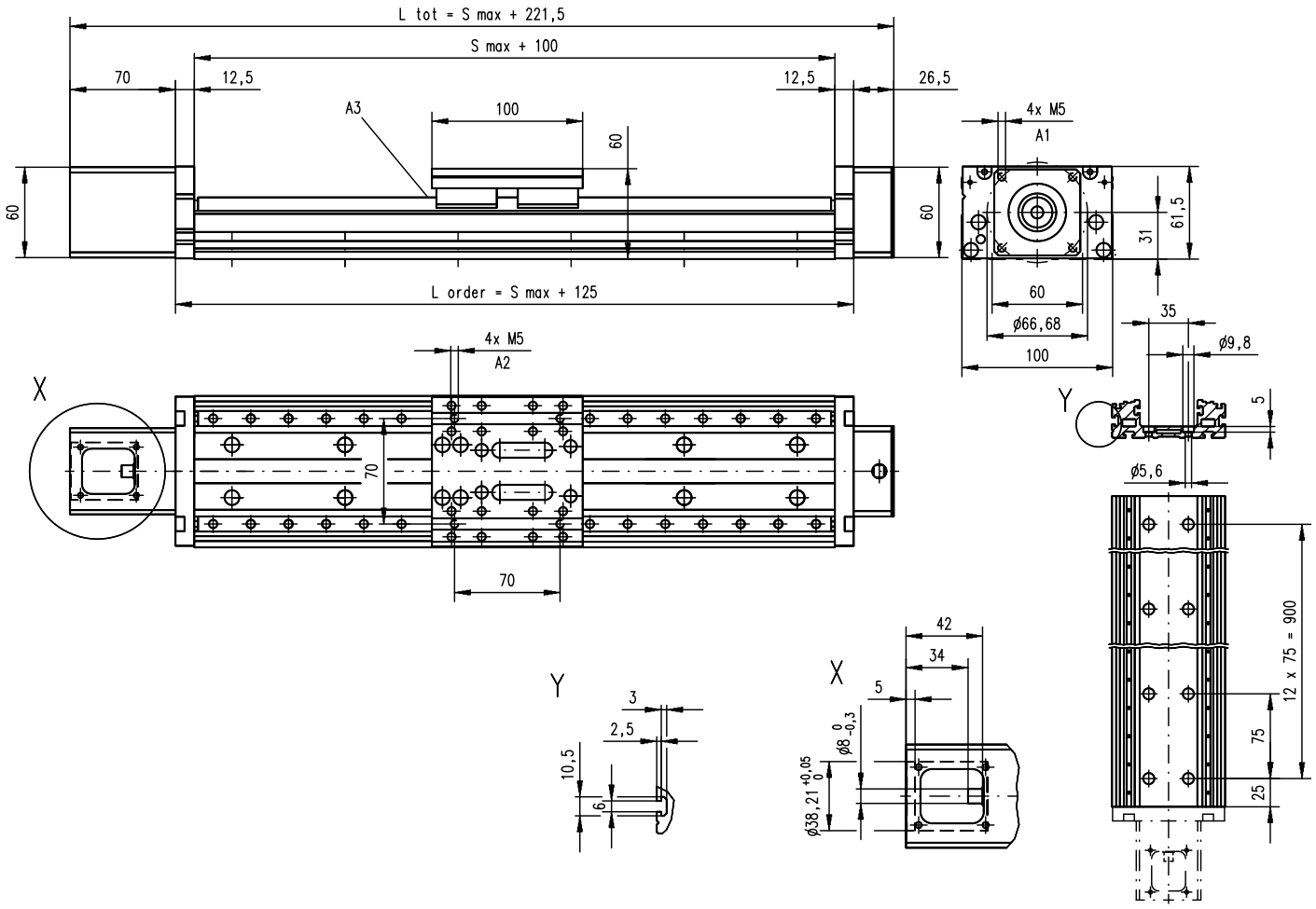

A1: depth 10
A2: depth 10 Heli coil

A3: lubrication nipple (using the unit with the nipple mounted makes stroke 10 mm shorter)

Double Carriages

Parameter		2HBE10
Minimum distance between carriages (Lc)	[mm]	112
Dynamic load (Fy), maximum	[N]	16500
Dynamic load (Fz), maximum	[N]	16500
Dynamic load torque (My), maximum	[Nm]	Lc[1] × 8,25
Dynamic load torque (Mz), maximum	[Nm]	Lc[1] × 8,25
Force required to move second carriage	[N]	12
Ordering lenght (L order)	[mm]	S max + Lc + 125
Total length (L tot]	[mm]	L order + 96,5
Weight of unit with zero stroke of carriages	[kg]	 - -

[1] Value in mm

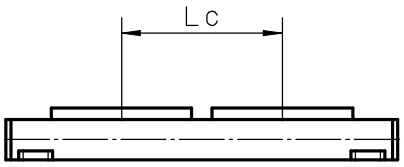

2HBE20

Ball Screw Drive, Ball Guide

» Ordering key - see page 197
» Accessories - see page 127
» Additional data - see page 183

General Specifications

Parameter	2HBE20
Profile size (w × h) [mm]	200 × 44
Type of screw	ball screw with double nut
Carriage sealing system	none
Screw supports	none
Lubrication	lubrication of screw and guides
Included accessories	none

Performance Specifications

Parameter		2HBE20
Stroke length (S max), maximum	[mm]	2800
Linear speed, maximum	[m/s]	1,3
Acceleration, maximum	[m/s²]	20
Repeatability	[± mm]	0,005
Input speed, maximum	[rpm]	3000
Operation temperature limits	[°C]	-20 – 70
Dynamic load (Fx), maximum	[N]	5000
Dynamic load (Fy), maximum	[N]	38000[1] / 9515[2]
Dynamic load (Fz), maximum	[N]	38000[1] / 9515[2]
Dynamic load torque (Mx), maximum	[Nm]	2760[1] / 3770[2]
Dynamic load torque (My), maximum	[Nm]	2130[1] / 2910[2]
Dynamic load torque (Mz), maximum	[Nm]	2130[1] / 2910[2]
Drive shaft force (Frd), maximum	[N]	0
Drive shaft torque (Mta), maximum	[Nm]	22
Ball screw diameter (d0)	[mm]	25
Ball screw lead (p)	[mm]	5, 10, 25
Weight	[kg]	
of unit with zero stroke		-
of every 100 mm of stroke		-
of each carriage		2,7

[1] Value for the complete unit
[2] Value for the ball guide only

Deflection of the Profile

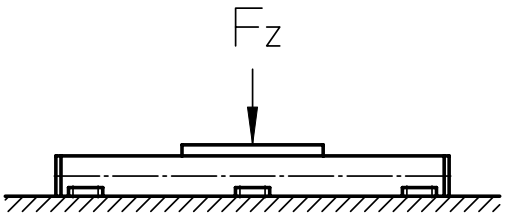

The unit must be continiously supported by a machined surface under its entire lenght.

Definition of Forces

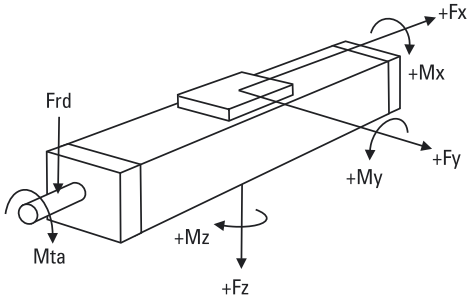

2HBE20

Ball Screw Drive, Ball Guide

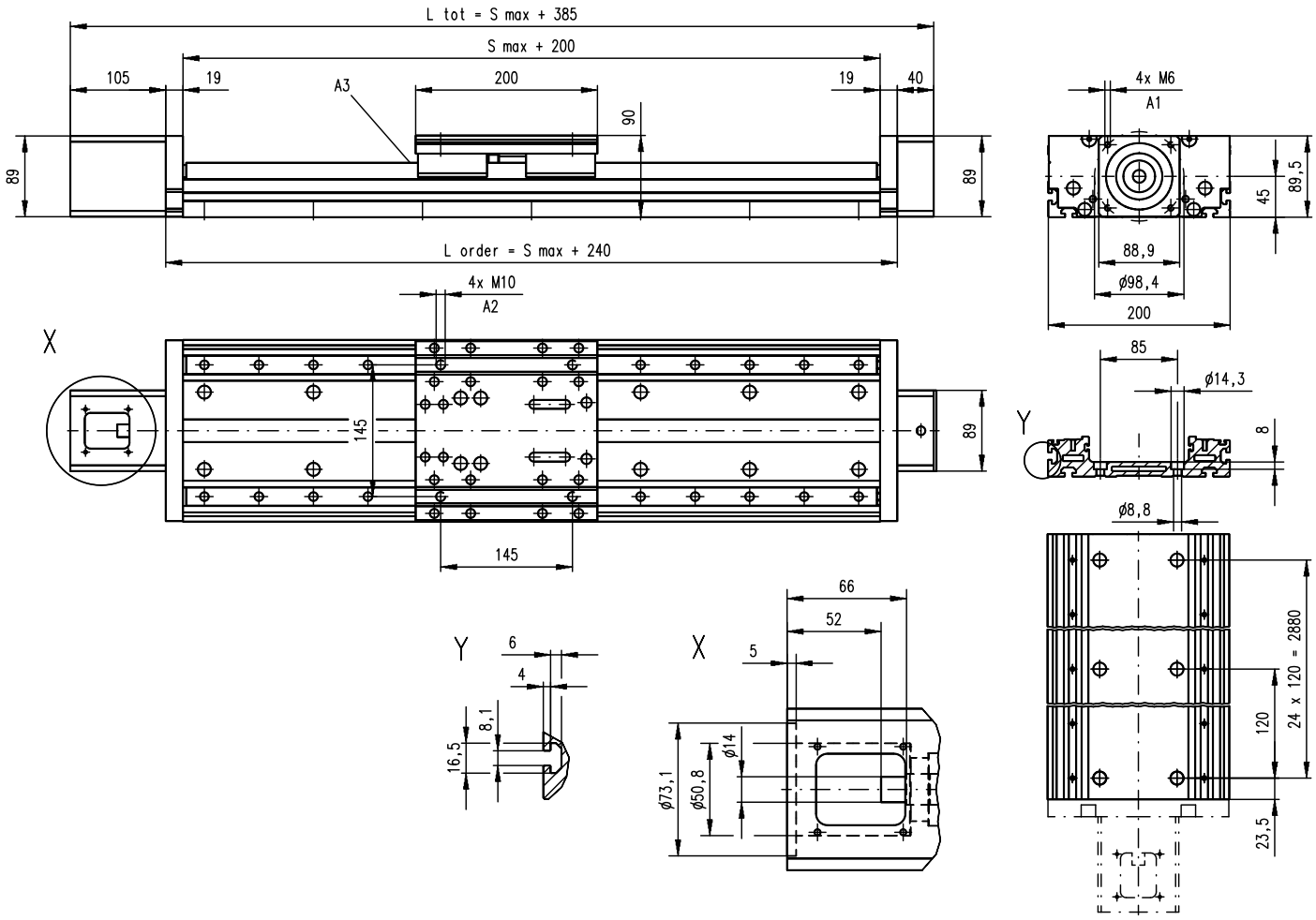

A1: depth 12
A2: depth 15 Heli coil

A3: lubrication nipple (using the unit with the nipple mounted makes stroke 10 mm shorter)

Double Carriages

Parameter		2HBE20
Minimum distance between carriages (Lc)	[mm]	210
Dynamic load (Fy), maximum	[N]	76000
Dynamic load (Fz), maximum	[N]	76000
Dynamic load torque (My), maximum	[Nm]	Lc[1] × 38
Dynamic load torque (Mz), maximum	[Nm]	Lc[1] × 38
Force required to move second carriage	[N]	17
Ordering lenght (L order)	[mm]	S max + Lc + 240
Total length (L tot]	[mm]	L order + 145
Weight of unit with zero stroke of carriages	[kg]	 - -

[1] Value in mm

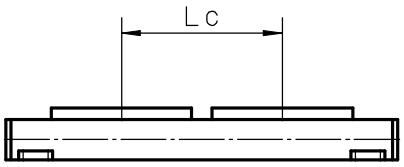

Linear Units with Ball Screw Drive and Slide Guide

BaseLine, Movopart

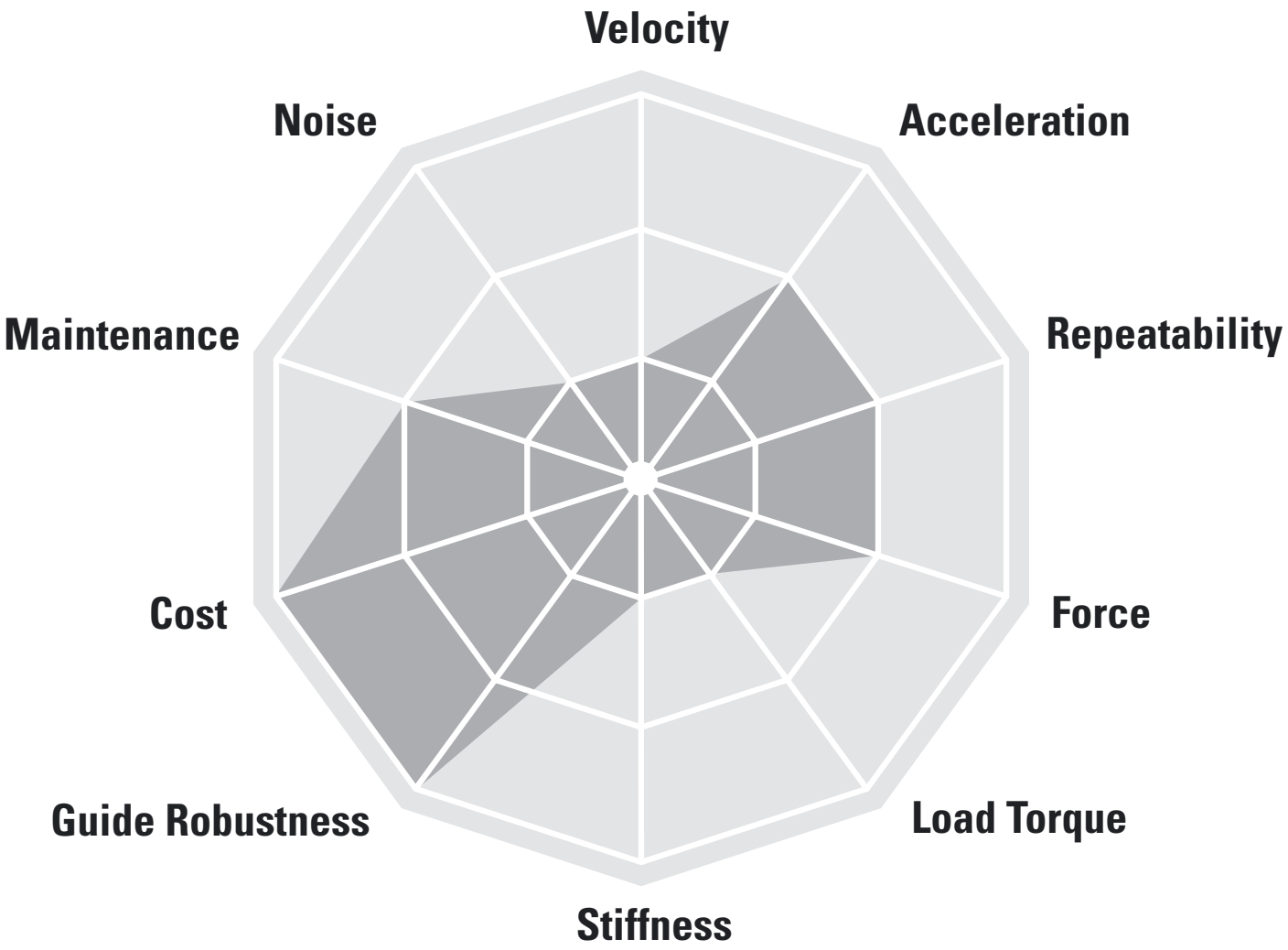

Typical Applications

Typical applications are where low to medium loads needs to be moved at low to medium speed. These units are also suited for harsh environments. Typical examples are all types of machines in the food, chemical, paper and wood working industry. Materials handling is another area where these units are ideal.

BaseLine WB


WB40

Features
- Can be installed in all directions
- Plastic cover band
- Robust slide guides
- Ball screw or lead screw drive

Parameter		WB40
Profile size (width × height)	[mm]	40 × 37
Stroke length (S max), maximum	[mm]	1000
Linear speed, maximum	[m/s]	0,25
Dynamic carriage load (Fz), maximum	[N]	250
Remarks		Ball screw or lead screw drive
Page		50

Movopart M


M75

Features
- Can be installed in all directions
- Self-adjusting stainless steel cover band
- Patented self-adjusting prism slide guides
- Wash down protected versions available

Parameter		M55	M75	M100
Profile size (width × height)	[mm]	58 × 55	86 × 75	108 × 100
Stroke length (S max), maximum	[mm]	3000	4000	6000
Linear speed, maximum	[m/s]	1	1,6	1,6
Dynamic carriage load (Fz), maximum	[N]	400	1485	3005
Remarks		single ball nut or composite nut	single ball nut or composite nut	single ball nut or composite nut
Page		52	54	56

Movopart MD


M100D

Features

- Can be installed in all directions
- Self-adjusting stainless steel cover band
- Patented self-adjusting prism slide guides
- Wash down protected versions available

Parameter	M75D	M100D
Profile size (width × height) [mm]	86 × 75	108 × 100
Stroke length (S max), maximum [mm]	3550	6000
Linear speed, maximum [m/s]	1,6	1,6
Dynamic carriage load (Fz), maximum [N]	1485	3005
Remarks	double ball nuts	double ball nuts
Page	58	60

WB40

Ball Screw or Lead Screw Drive, Slide Guide

» Ordering key - see page 198
» Accessories - see page 127
» Additional data - see page 184

General Specifications

Parameter	WB40
Profile size (w × h) [mm]	40 × 37
Type of screw	ball or lead screw with single nut
Carriage sealing system	plastic cover band
Screw supports	none
Lubrication	central lubrication of all parts that require lubrication
Included accessories	4 × mounting clamps

Performance Specifications

Parameter		WB40
Stroke length (S max), maximum	[mm]	1000
Linear speed, maximum	[m/s]	0,25
Acceleration, maximum	[m/s²]	5
Repeatability	[± mm]	0,05
Input speed, maximum Ball screw units Lead screw units with composite nut	[rpm]	3000 1500
Operation temperature limits	[°C]	0 – 80
Dynamic load (Fx), maximum ball screw units / lead screw units	[N]	200 / 500
Dynamic load (Fy), maximum	[N]	200[1]
Dynamic load (Fz), maximum	[N]	250[1]
Dynamic load torque (Mx), maximum	[Nm]	6[1]
Dynamic load torque (My), maximum	[Nm]	15[1]
Dynamic load torque (Mz), maximum	[Nm]	10[1]
Drive shaft force (Frd), maximum	[N]	80
Drive shaft torque (Mta), maximum	[Nm]	1
Screw diameter (d_0)	[mm]	12
Screw lead (p) ball screw units / lead screw units	[mm]	5 / 8
Weight of unit with zero stroke of every 100 mm of stroke of each carriage	[kg]	 1,07 0,30 0,45

[1] Value for the complete unit

Carriage Idle Torque (M idle) [Nm]

Input speed [rpm]	Screw lead [mm]	
	p = 5	p = 8
150	0,02	-
1500	0,35	-
3000	0,50	-

M idle = the input torque needed to move the carriage with no load on it.

Deflection of the Profile

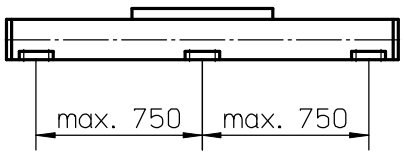

A mounting clamp must be installed at least at every 750 mm to be able to operate the maximum load. Less clamps may be required if less load is being operated, see the additional technical data for more information.

Critical Speed

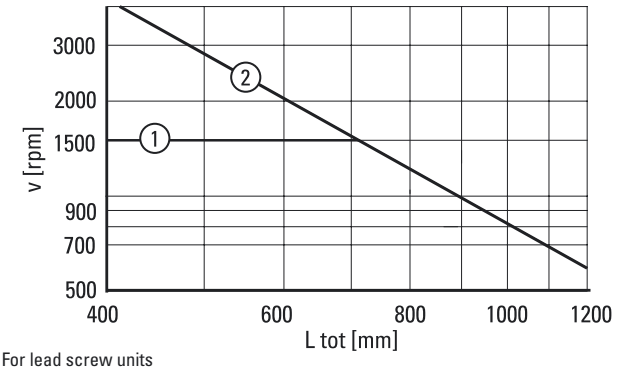

1: For lead screw units
2: For ball screw units

Definition of Forces

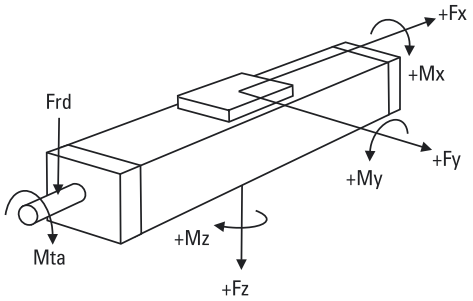

WB40

Ball Screw or Lead Screw Drive, Slide Guide

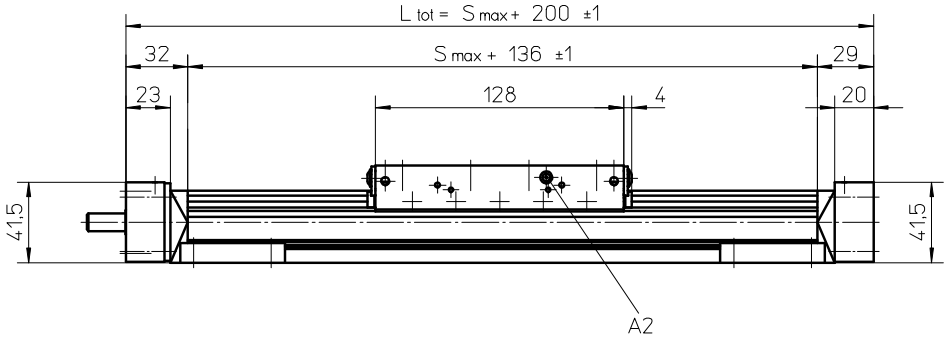

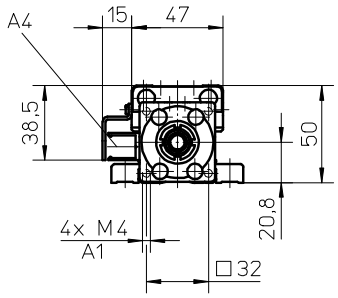

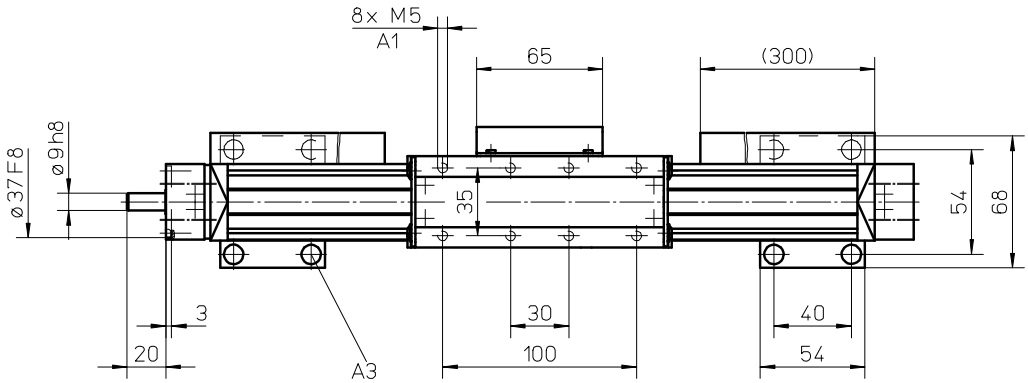

A1: depth 10
A2: lubricating nipple DIN3405 D 1/A
A3: socket cap screw ISO4762-M5×20 8.8
A4: ENF inductive sensor rail option kit (optional)

M55

Ball Screw Drive, Slide Guide

» Ordering key - see page 199
» Accessories - see page 127
» Additional data - see page 184

General Specifications

Parameter	M55
Profile size (w × h) [mm]	58 × 55
Type of screw	ball screw with single nut
Carriage sealing system	self-adjusting steel cover band
Screw supports	number of screw supports to be specified by customer at order
Lubrication	lubrication of ball screw
Included accessories	none

Performance Specifications

Parameter		M55
Stroke length (S max), maximum	[mm]	3000
Linear speed, maximum	[m/s]	1,0
Acceleration, maximum	[m/s²]	8
Repeatability	[± mm]	0,05
Input speed, maximum ball nut units / composite nut units	[rpm]	 3000 / 1500
Operation temperature limits	[°C]	-20 – 70
Dynamic load (Fx), maximum ball nut units / composite nut units	[N]	 1000 / 500
Dynamic load (Fy), maximum	[N]	400[1]
Dynamic load (Fz), maximum	[N]	400[1]
Dynamic load torque (Mx), maximum	[Nm]	9[1]
Dynamic load torque (My), maximum	[Nm]	23[1]
Dynamic load torque (Mz), maximum	[Nm]	23[1]
Drive shaft force (Frd), maximum	[N]	200
Drive shaft torque (Mta), maximum	[Nm]	12
Screw diameter (d0)	[mm]	16
Screw lead (p) ball nut units / composite nut units	[mm]	 5, 5,08, 10, 20 / 32
Weight of unit with zero stroke of every 100 mm of stroke of carriage of option single screw support of option double screw supports	[kg]	 3,06 0,44 1,20 0,83 1,88

[1] Value for the complete unit

Carriage Idle Torque (M idle) [Nm]

Input speed [rpm]	Screw lead [mm]				
	p = 5	p = 5,08	p = 10	p = 20	p = 32[1]
500 - no screw supports	0,10	0,10	0,15	0,30	0,80
500 - with screw supports	0,13	0,13	0,27	0,45	1,00

[1] Value for cmposite nut.
M idle = the input torque needed to move the carriage with no load on it.

Deflection of the Profile

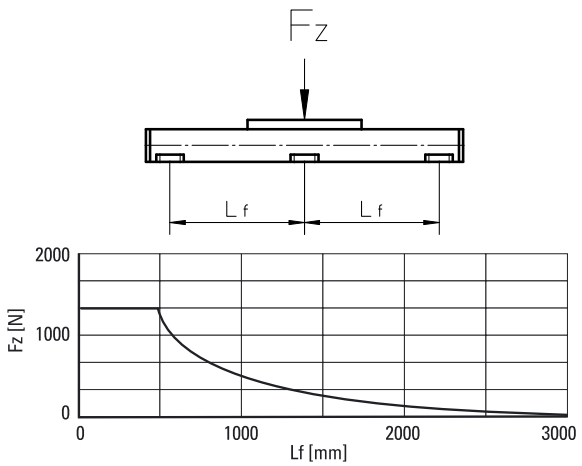

Critical Speed

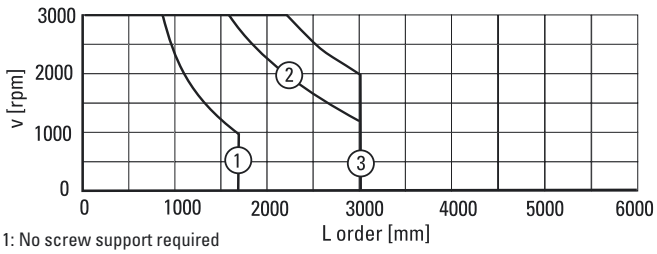

1: No screw support required
2: Single screw support required
3: Double screw supports required

Definition of Forces

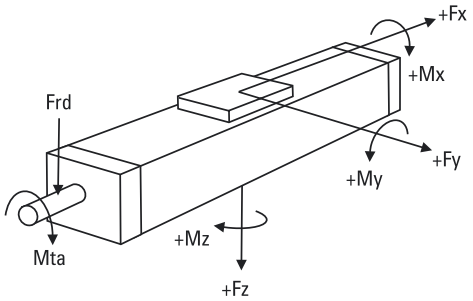

M55

Ball Screw Drive, Slide Guide

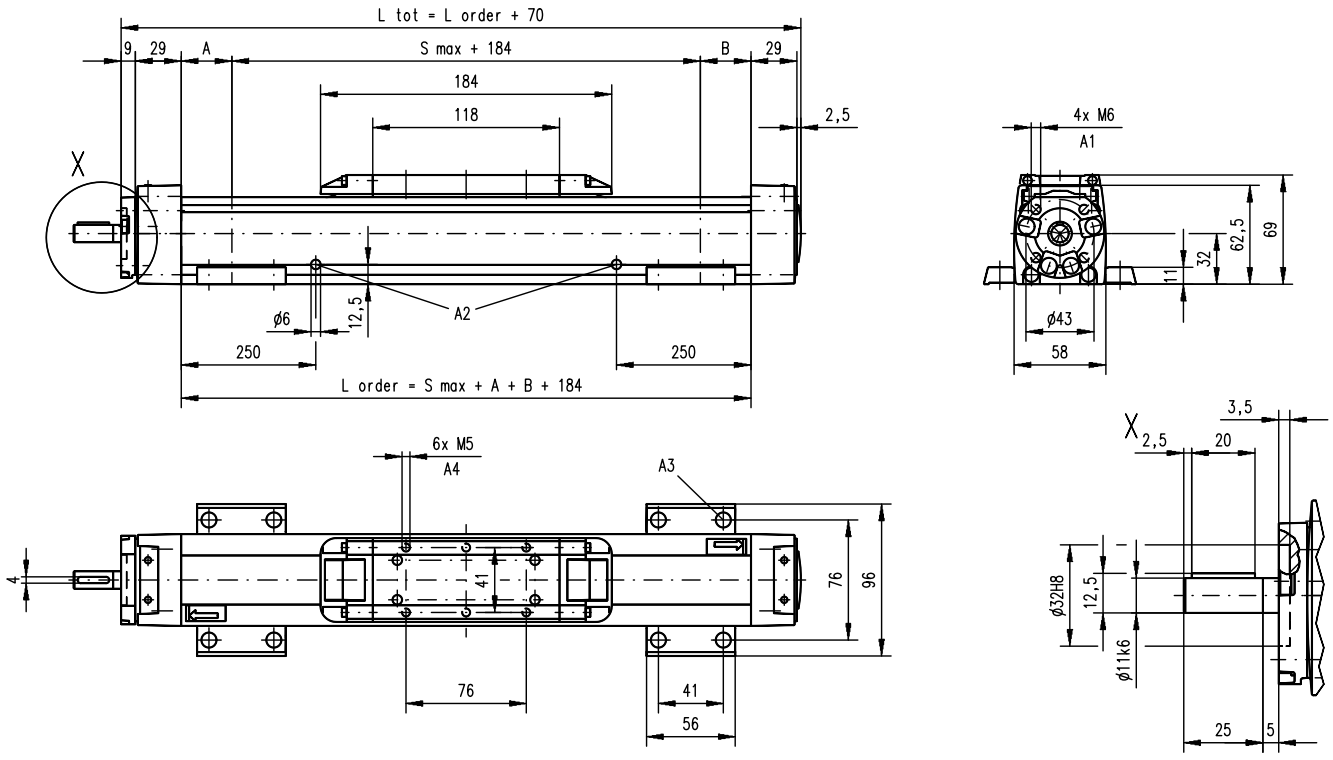

A1: depth 7,5, Heli coil
A2: lubrication holes
A3: ø9,5/ø5,5 for socket head cap screw M5
A4: depth 7,5, Heli coil

Screw support configuration	A [mm]	B [mm]	Ordering length (L order) [mm]	Total length (L tot) [mm]
No screw support	6	6	L order = S max + A + B + 184	L tot = L order + 70
Single screw support	32	32	L order = S max + A + B + 184	L tot = L order + 70
Double screw supports	83	83	L order = S max + A + B + 184	L tot = L order + 70

Double Carriages

Parameter		M55
Minimum distance between carriages (Lc)	[mm]	200
Dynamic load (Fy), maximum	[N]	600
Dynamic load (Fz), maximum	[N]	600
Dynamic load torque (My), maximum	[Nm]	Lc[1] × 0,3
Dynamic load torque (Mz), maximum	[Nm]	Lc[1] × 0,3
Force required to move second carriage	[N]	35
Weight of unit with zero stroke of carriages	[kg]	 5,14 2,40

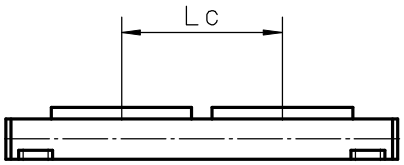

Screw support configuration	A [mm]	B [mm]	Ordering length (L order) [mm]	Total length (L tot) [mm]
No screw support	6	6	L order = S max + A + B + Lc + 184	L tot = L order + 70
Single screw support	32	32	L order = S max + A + B + Lc + 184	L tot = L order + 70
Double screw supports	83	83	L order = S max + A + B + Lc + 184	L tot = L order + 70

[1] Value in mm

M75

Ball Screw Drive, Slide Guide

» Ordering key - see page 199
» Accessories - see page 127
» Additional data - see page 184

General Specifications

Parameter	M75
Profile size (w × h) [mm]	86 × 75
Type of screw	ball screw with single nut
Carriage sealing system	self-adjusting steel cover band
Screw supports	number of screw supports to be specified by customer at order
Lubrication	lubrication of ball screw
Included accessories	none

Performance Specifications

Parameter		M75
Stroke length (S max), maximum	[mm]	4000
Linear speed, maximum	[m/s]	1,6
Acceleration, maximum	[m/s²]	8
Repeatability	[± mm]	0,05
Input speed, maximum ball nut units / composite nut units	[rpm]	 5000 / 1500
Operation temperature limits	[°C]	-20 – 70
Dynamic load (Fx), maximum ball nut units / composite nut units	[N]	 2500 / 1250
Dynamic load (Fy), maximum	[N]	1485[1]
Dynamic load (Fz), maximum	[N]	1485[1]
Dynamic load torque (Mx), maximum	[Nm]	49[1]
Dynamic load torque (My), maximum	[Nm]	85[1]
Dynamic load torque (Mz), maximum	[Nm]	85[1]
Drive shaft force (Frd), maximum	[N]	600
Drive shaft torque (Mta), maximum	[Nm]	30
Screw diameter (d_0)	[mm]	20
Screw lead (p) ball nut units / composite nut units	[mm]	 5, 12,7, 20 / 5
Weight of unit with zero stroke of every 100 mm of stroke of carriage of option single screw support of option double screw supports	[kg]	 6,07 0,82 1,70 1,70 3,58

[1] Value for the complete unit

Carriage Idle Torque (M idle) [Nm]

Input speed [rpm]	Screw lead [mm]			
	p = 5	p = 5[1]	p = 12,7	p = 20
500 - no screw supports	0,10	0,20	0,24	0,37
500 - with screw supports	0,15	0,50	0,39	0,57

[1] Value for composite nut.
M idle = the input torque needed to move the carriage with no load on it.

Deflection of the Profile

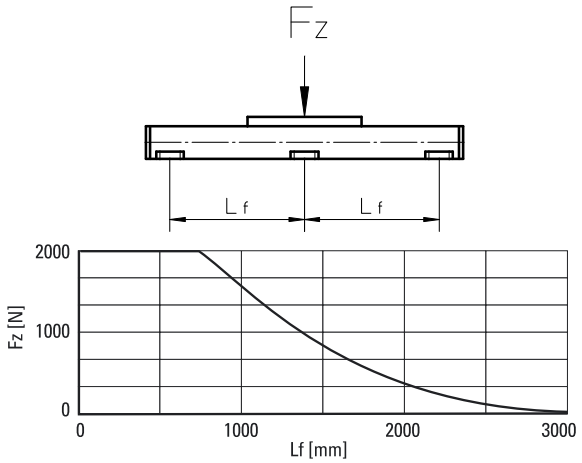

Critical Speed

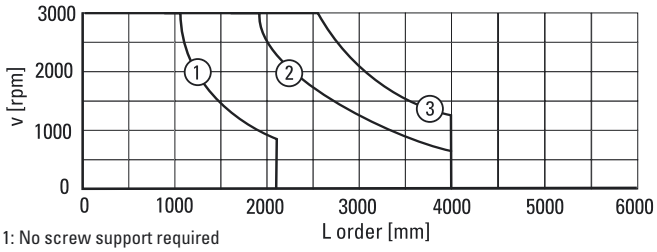

1: No screw support required
2: Single screw support required
3: Double screw supports required

Definition of Forces

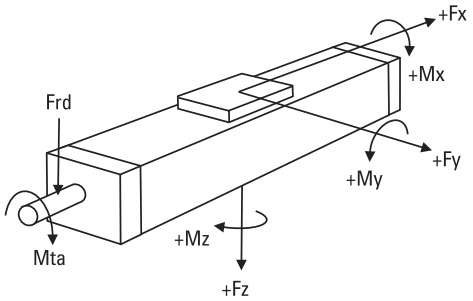

M75

Ball Screw Drive, Slide Guide

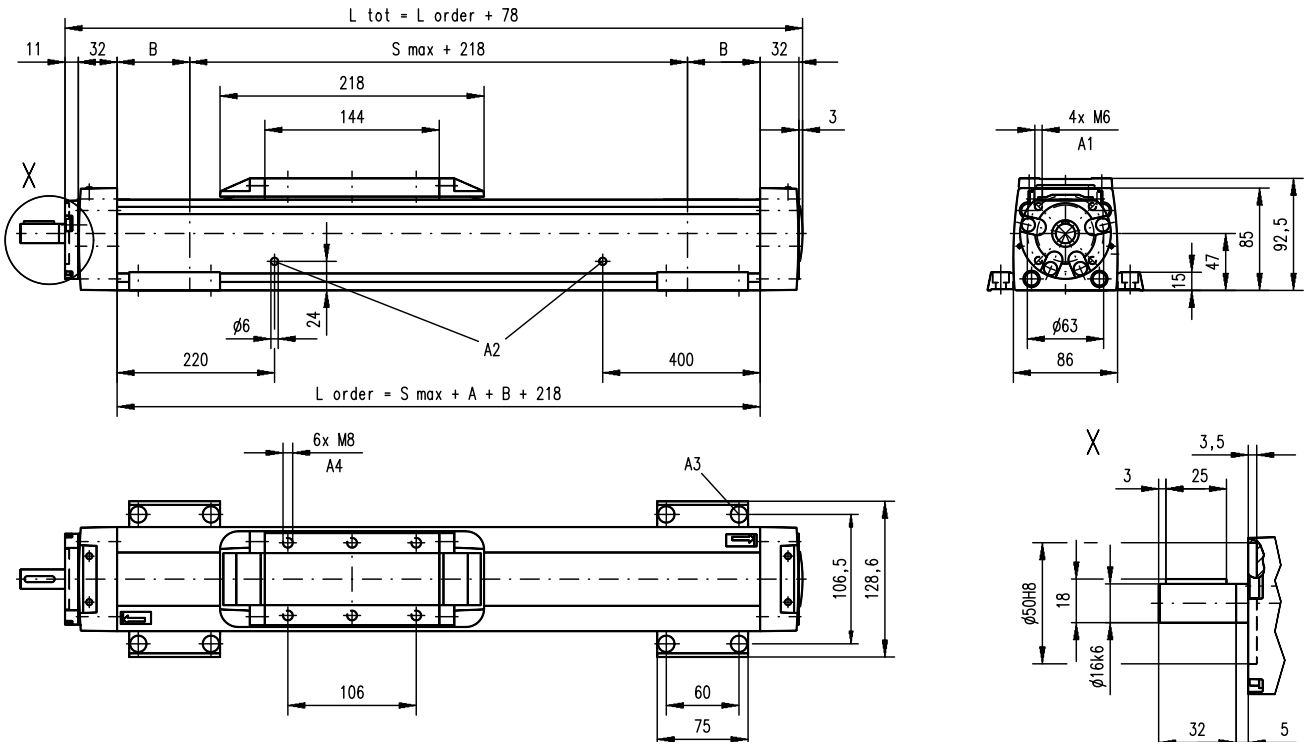

A1: depth 9, Heli coil
A2: lubrication holes
A3: ø13,5/ø8,5 for socket head cap screw M8
A4: depth 8, Heli coil

Screw support configuration	A [mm]	B [mm]	Ordering length (L order) [mm]	Total length (L tot) [mm]
No screw support	5	5	L order = S max + A + B + 218	L tot = L order + 78
Single screw support	60	60	L order = S max + A + B + 218	L tot = L order + 78
Double screw supports	126	126	L order = S max + A + B + 218	L tot = L order + 78

Double Carriages

Parameter		M75
Minimum distance between carriages (Lc)	[mm]	250
Dynamic load (Fy), maximum	[N]	2227
Dynamic load (Fz), maximum	[N]	2227
Dynamic load torque (My), maximum	[Nm]	Lc[1] × 1,114
Dynamic load torque (Mz), maximum	[Nm]	Lc[1] × 1,114
Force required to move second carriage	[N]	40
Weight of unit with zero stroke of carriages	[kg]	 9,82 3,40

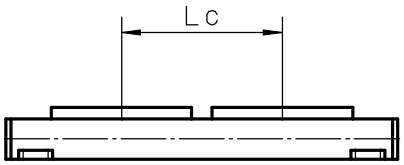

Screw support configuration	A [mm]	B [mm]	Ordering length (L order) [mm]	Total length (L tot) [mm]
No screw support	5	5	L order = S max + A + B + Lc + 218	L tot = L order + 78
Single screw support	60	60	L order = S max + A + B + Lc + 218	L tot = L order + 78
Double screw supports	126	126	L order = S max + A + B + Lc + 218	L tot = L order + 78

[1] Value in mm

M100

Ball Screw Drive, Slide Guide

» Ordering key - see page 199
» Accessories - see page 127
» Additional data - see page 184

General Specifications

Parameter	M100
Profile size (w × h) [mm]	108 × 100
Type of screw	ball screw with single nut
Carriage sealing system	self-adjusting steel cover band
Screw supports	number of screw supports to be specified by customer at order
Lubrication	lubrication of ball screw
Included accessories	none

Performance Specifications

Parameter		M100
Stroke length (S max), maximum	[mm]	6000
Linear speed, maximum	[m/s]	1,6
Acceleration, maximum	[m/s²]	8
Repeatability	[± mm]	0,05
Input speed, maximum ball nut units / composite nut units	[rpm]	 4000 / 1500
Operation temperature limits	[°C]	-20 – 70
Dynamic load (Fx), maximum ball nut units / composite nut units	[N]	 5000 / 2000
Dynamic load (Fy), maximum	[N]	3005
Dynamic load (Fz), maximum	[N]	3005
Dynamic load torque (Mx), maximum	[Nm]	117
Dynamic load torque (My), maximum	[Nm]	279
Dynamic load torque (Mz), maximum	[Nm]	279
Drive shaft force (Frd), maximum	[N]	1000
Drive shaft torque (Mta), maximum	[Nm]	45
Screw diameter (d_0)	[mm]	25
Screw lead (p) ball nut units / composite nut units	[mm]	 5, 10, 25 / 10, 25
Weight of unit with zero stroke of every 100 mm of stroke of carriage of option single screw support of option double screw supports	[kg]	 12,87 1,42 3,50 1,86 4,42

[1] Value for the complete unit

Carriage Idle Torque (M idle) [Nm]

Input speed [rpm]	Screw lead [mm]				
	p = 5	p = 10	p = 10[1]	p = 25	p = 25[1]
500 - no screw supports	0,15	0,25	0,50	0,55	1,00
500 - with screw supports	0,25	0,40	0,80	0,85	1,30

[1] Value for composite nut.
M idle = the input torque needed to move the carriage with no load on it.

Deflection of the Profile

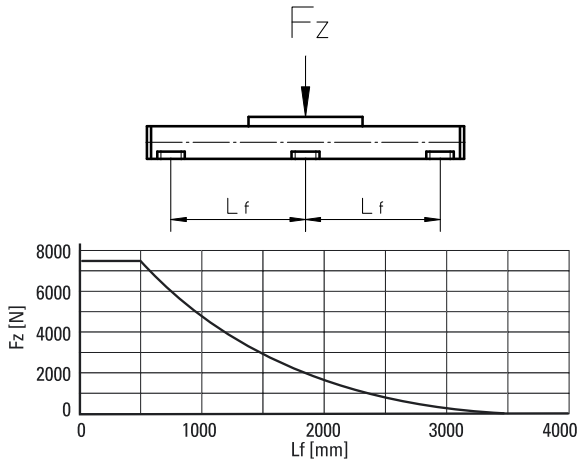

Critical Speed

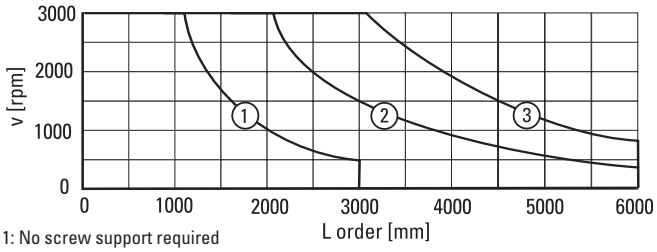

1: No screw support required
2: Single screw support required
3: Double screw supports required

Definition of Forces

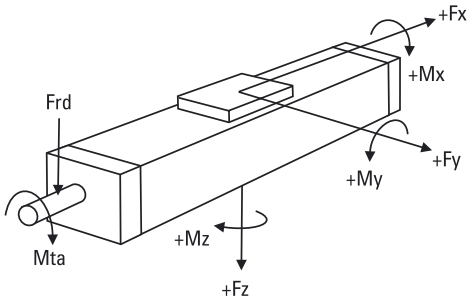

M100

Ball Screw Drive, Slide Guide

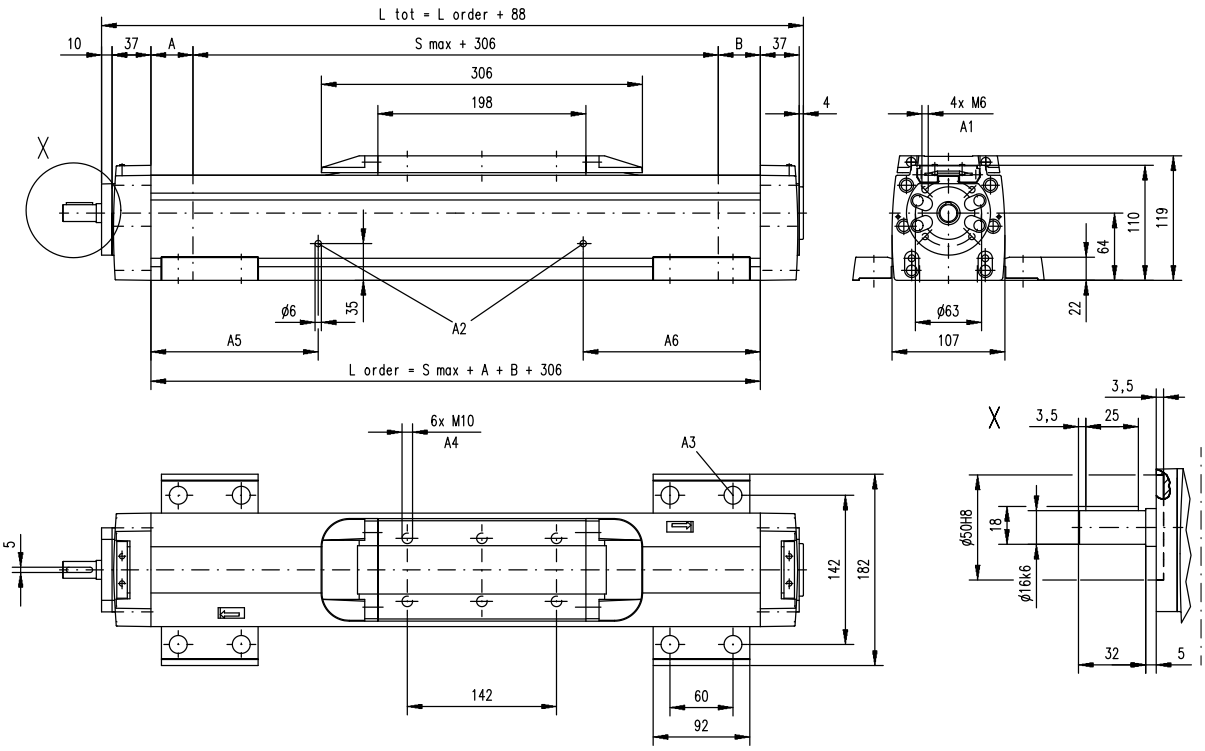

A1: depth 9, Heli coil
A2: lubrication holes
A3: ø17/ø10,5 for socket head cap screw M10
A4: depth 10, Heli coil
A5: 100 (L order <= 1 m), 320 (L order > 1 m)
A6: 100 (L order <= 1 m), 430 (L order > 1 m)

Screw support configuration	A [mm]	B [mm]	Ordering length (L order) [mm]	Total length (L tot) [mm]
No screw support	1	1	L order = S max + A + B + 306	L tot = L order + 88
Single screw support	31	31	L order = S max + A + B + 306	L tot = L order + 88
Double screw supports	86	86	L order = S max + A + B + 306	L tot = L order + 88

Double Carriages

Parameter		M100
Minimum distance between carriages (Lc)	[mm]	350
Dynamic load (Fy), maximum	[N]	4508
Dynamic load (Fz), maximum	[N]	4508
Dynamic load torque (My), maximum	[Nm]	Lc[1] × 2,254
Dynamic load torque (Mz), maximum	[Nm]	Lc[1] × 2,254
Force required to move second carriage	[N]	45
Weight of unit with zero stroke of carriages	[kg]	 21,34 7,00

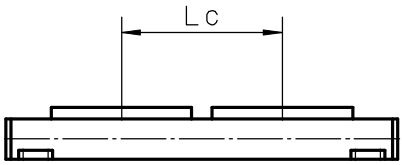

Screw support configuration	A [mm]	B [mm]	Ordering length (L order) [mm]	Total length (L tot) [mm]
No screw support	1	1	L order = S max + A + B + Lc + 306	L tot = L order + 88
Single screw support	31	31	L order = S max + A + B + Lc + 306	L tot = L order + 88
Double screw supports	86	86	L order = S max + A + B + Lc + 306	L tot = L order + 88

[1] Value in mm

M75D

Ball Screw Drive, Slide Guide, Double Ball Nuts

» Ordering key - see page 200
» Accessories - see page 127
» Additional data - see page 184

General Specifications

Parameter	M75D
Profile size (w × h) [mm]	86 × 75
Type of screw	ball screw with double nut
Carriage sealing system	self-adjusting steel cover band
Screw supports	number of screw supports to be specified by customer at order
Lubrication	lubrication of ball screw
Included accessories	none

Performance Specifications

Parameter		M75D
Stroke length (S max), maximum	[mm]	3550
Linear speed, maximum	[m/s]	1,6
Acceleration, maximum	[m/s²]	8
Repeatability	[± mm]	0,05
Input speed, maximum	[rpm]	5000
Operation temperature limits	[°C]	-20 – 70
Dynamic load (Fx), maximum	[N]	2500[1]
Dynamic load (Fy), maximum	[N]	1485[1]
Dynamic load (Fz), maximum	[N]	1485[1]
Dynamic load torque (Mx), maximum	[Nm]	49[1]
Dynamic load torque (My), maximum	[Nm]	85[1]
Dynamic load torque (Mz), maximum	[Nm]	85[1]
Drive shaft force (Frd), maximum	[N]	600
Drive shaft torque (Mta), maximum	[Nm]	30
Screw diameter (d_0)	[mm]	20
Screw lead (p)	[mm]	5, 20
Weight	[kg]	
of unit with zero stroke		6,57
of every 100 mm of stroke		0,82
of carriage		1,70
of option single screw support		1,70
of option double screw supports		3,58

[1] Value for the complete unit

Carriage Idle Torque (M idle) [Nm]

Input speed [rpm]	Screw lead [mm]	
	p = 5	p = 20
500 - no screw supports	0,15	0,5
500 - with screw supports	0,2	0,8

M idle = the input torque needed to move the carriage with no load on it.

Deflection of the Profile

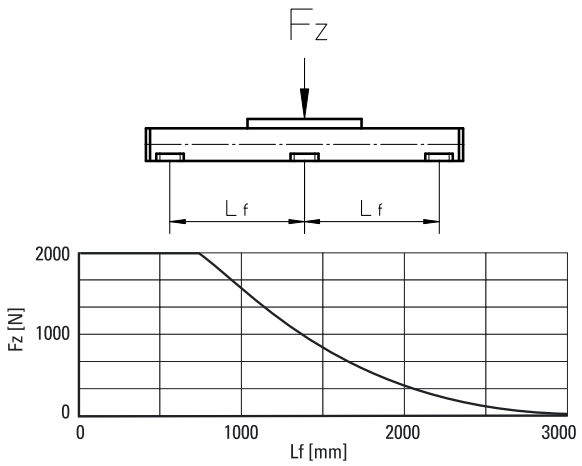

Critical Speed

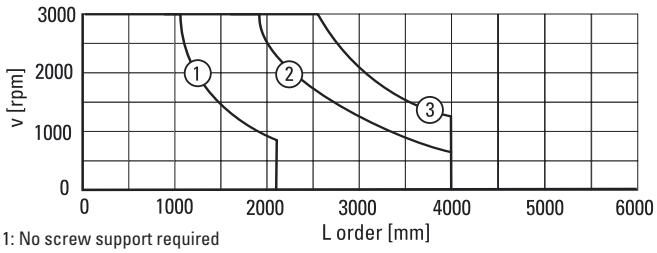

1: No screw support required
2: Single screw support required
3: Double screw supports required

Definition of Forces

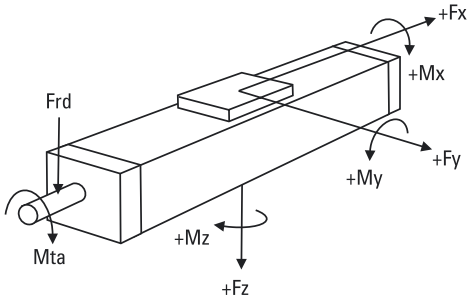

M75D

Ball Screw Drive, Slide Guide, Double Ball Nuts

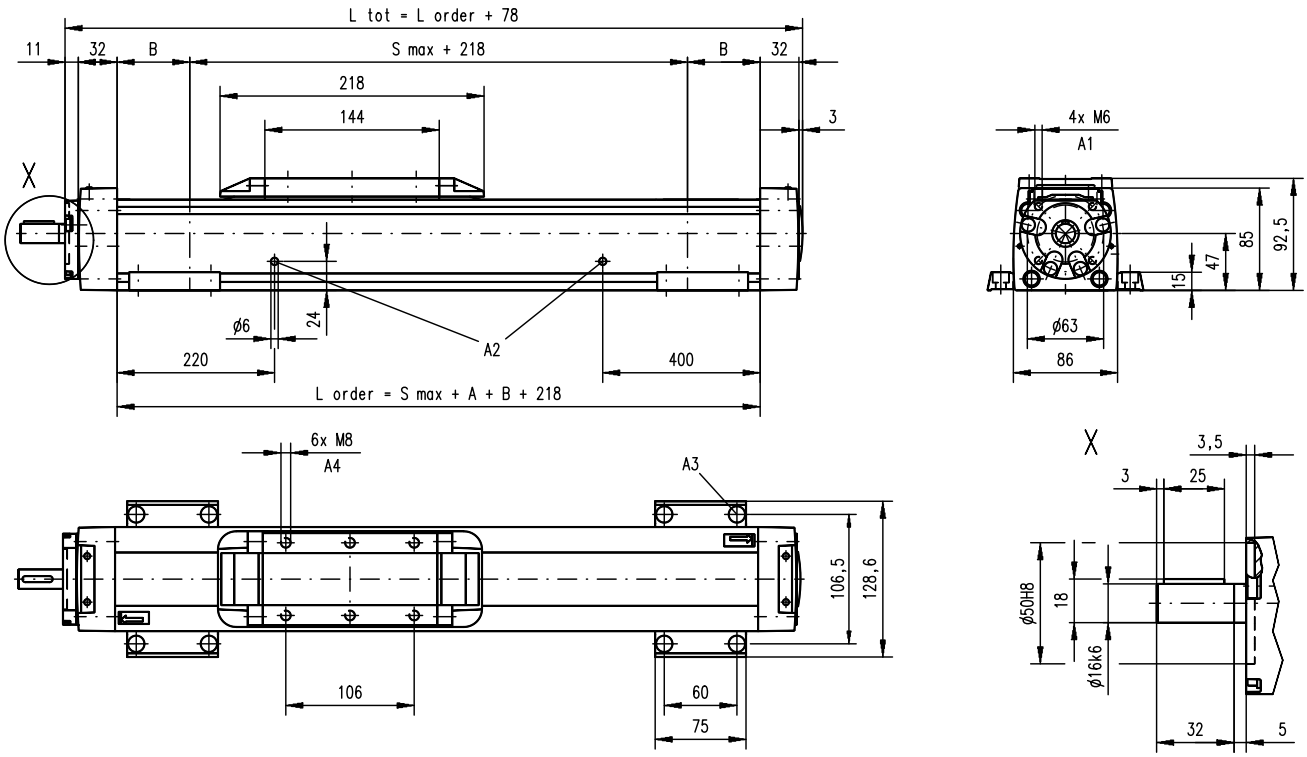

A1: depth 9, Heli coil
A2: lubrication holes
A3: ø13,5/ø8,5 for socket head cap screw M8
A4: depth 8, Heli coil

Screw support configuration	A [mm]	B [mm]	Ordering length (L order) [mm]	Total length (L tot) [mm]
No screw support	5	76	L order = S max + A + B + 218	L tot = L order + 78
Single screw support	60	151	L order = S max + A + B + 218	L tot = L order + 78
Double screw supports	126	216	L order = S max + A + B + 218	L tot = L order + 78

Double Carriages

Parameter		M75D
Minimum distance between carriages (Lc)	[mm]	250
Dynamic load (Fy), maximum	[N]	2227
Dynamic load (Fz), maximum	[N]	2227
Dynamic load torque (My), maximum	[Nm]	Lc[1] × 1,114
Dynamic load torque (Mz), maximum	[Nm]	Lc[1] × 1,114
Force required to move second carriage	[N]	40
Weight of unit with zero stroke of carriages	[kg]	 6,92 3,4

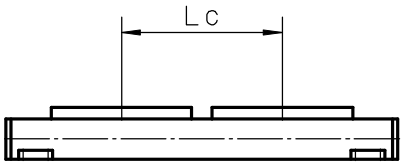

Screw support configuration	A [mm]	B [mm]	Ordering length (L order) [mm]	Total length (L tot) [mm]
No screw support	5	76	L order = S max + A + B + Lc + 218	L tot = L order + 78
Single screw support	60	151	L order = S max + A + B + Lc + 218	L tot = L order + 78
Double screw supports	126	216	L order = S max + A + B + Lc + 218	L tot = L order + 78

[1] Value in mm

M100D

Ball Screw Drive, Slide Guide, Double Ball Nuts

» Ordering key - see page 200
» Accessories - see page 127
» Additional data - see page 184

General Specifications

Parameter	M100D
Profile size (w × h) [mm]	108 × 100
Type of screw	ball screw with double nut
Carriage sealing system	self-adjusting steel cover band
Screw supports	number of screw supports to be specified by customer at order
Lubrication	lubrication of ball screw
Included accessories	none

Performance Specifications

Parameter		M100D
Stroke length (S max), maximum	[mm]	6000
Linear speed, maximum	[m/s]	1,6
Acceleration, maximum	[m/s²]	8
Repeatability	[± mm]	0,05
Input speed, maximum	[rpm]	4000
Operation temperature limits	[°C]	-20 – 70
Dynamic load (Fx), maximum	[N]	5000
Dynamic load (Fy), maximum	[N]	3005[1]
Dynamic load (Fz), maximum	[N]	3005[1]
Dynamic load torque (Mx), maximum	[Nm]	117[1]
Dynamic load torque (My), maximum	[Nm]	279[1]
Dynamic load torque (Mz), maximum	[Nm]	279[1]
Drive shaft force (Frd), maximum	[N]	100
Drive shaft torque (Mta), maximum	[Nm]	45
Screw diameter (d_0)	[mm]	25
Screw lead (p)	[mm]	5, 10, 25
Weight	[kg]	
of unit with zero stroke		13,87
of every 100 mm of stroke		1,42
of carriage		3,50
of option single screw support		1,86
of option double screw supports		4,42

[1] Value for the complete unit

Carriage Idle Torque (M idle) [Nm]

Input speed [rpm]	Screw lead [mm]		
	p = 5	p = 10	p = 25
500 - no screw supports	0,2	0,4	0,8
500 - with screw supports	0,4	0,6	1,3

M idle = the input torque needed to move the carriage with no load on it.

Deflection of the Profile

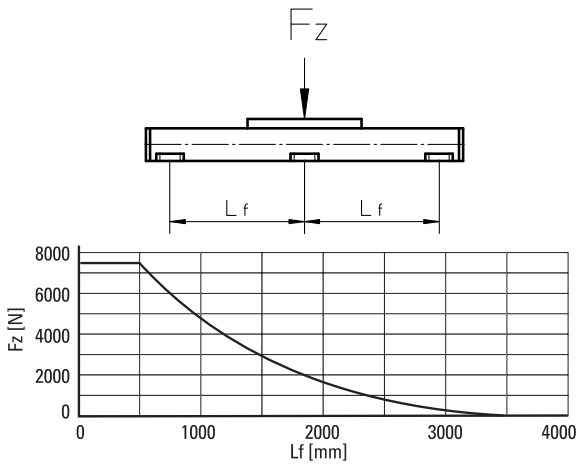

Critical Speed

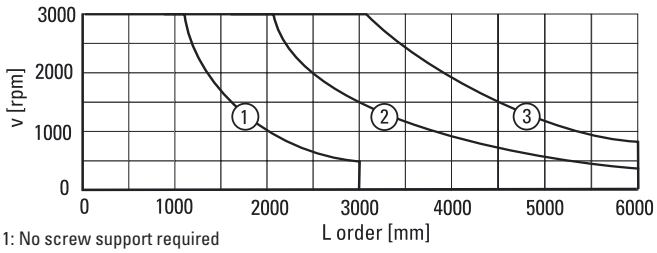

1: No screw support required
2: Single screw support required
3: Double screw supports required

Definition of Forces

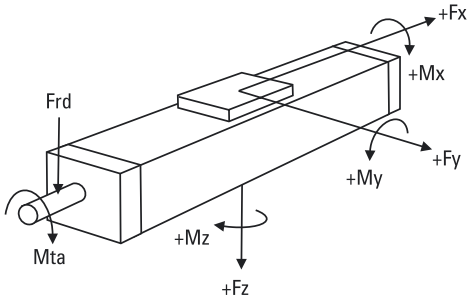

M100D

Ball Screw Drive, Slide Guide, Double Ball Nuts

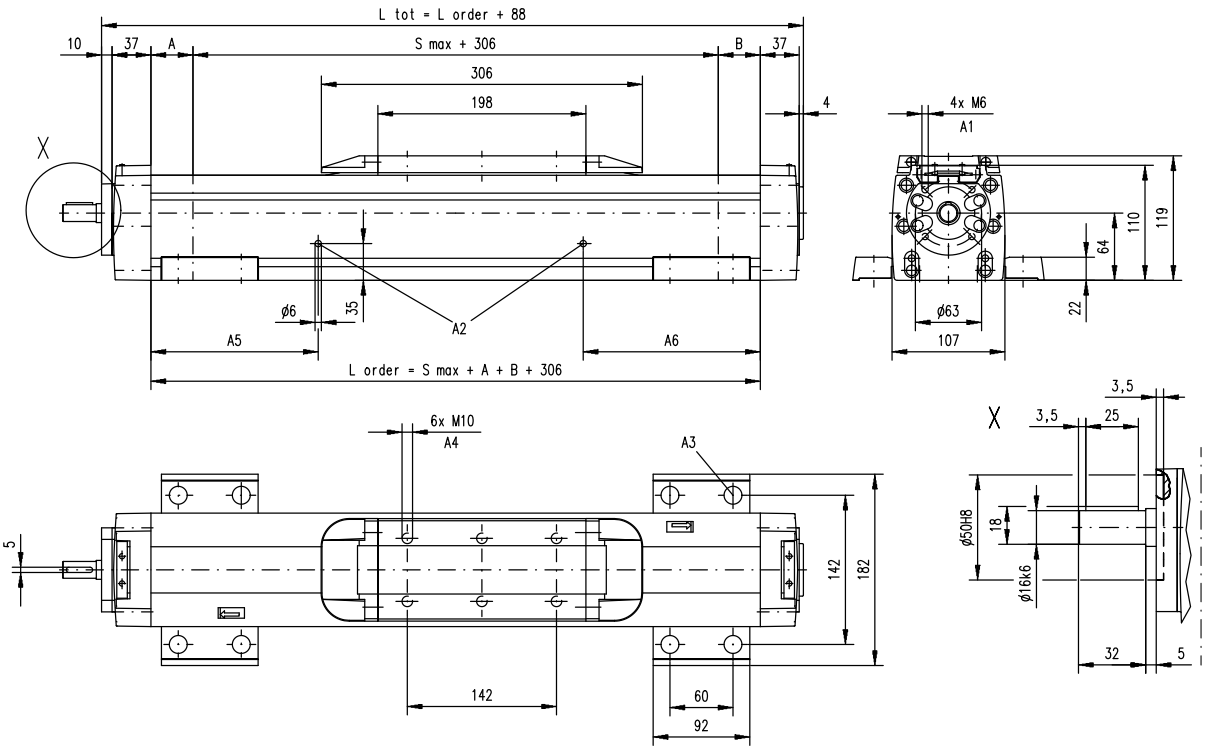

A1: depth 9, Heli coil
A2: lubrication holes
A3: ø17/ø10,5 for socket head cap screw M10
A4: depth 10, Heli coil
A5: 100 (L order <= 1 m), 320 (L order > 1 m)
A6: 100 (L order <= 1 m), 430 (L order > 1 m)

Screw support configuration	A [mm]	B [mm]	Ordering length (L order) [mm]	Total length (L tot) [mm]
No screw support	1	59	L order = S max + A + B + 306	L tot = L order + 88
Single screw support	31	117	L order = S max + A + B + 306	L tot = L order + 88
Double screw supports	86	172	L order = S max + A + B + 306	L tot = L order + 88

Double Carriages

Parameter		M100D
Minimum distance between carriages (Lc)	[mm]	350
Dynamic load (Fy), maximum	[N]	4508
Dynamic load (Fz), maximum	[N]	4508
Dynamic load torque (My), maximum	[Nm]	Lc[1] × 2,254
Dynamic load torque (Mz), maximum	[Nm]	Lc[1] × 2,254
Force required to move second carriage	[N]	45
Weight of unit with zero stroke of carriages	[kg]	 15,43 7,00

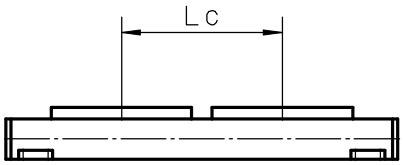

Screw support configuration	A [mm]	B [mm]	Ordering length (L order) [mm]	Total length (L tot) [mm]
No screw support	1	59	L order = S max + A + B + Lc + 306	L tot = L order + 88
Single screw support	31	117	L order = S max + A + B + Lc + 306	L tot = L order + 88
Double screw supports	86	172	L order = S max + A + B + Lc + 306	L tot = L order + 88

[1] Value in mm

Linear Units with Belt Drive and Ball Guide

SpeedLine, Movopart, ForceLine, Microstage

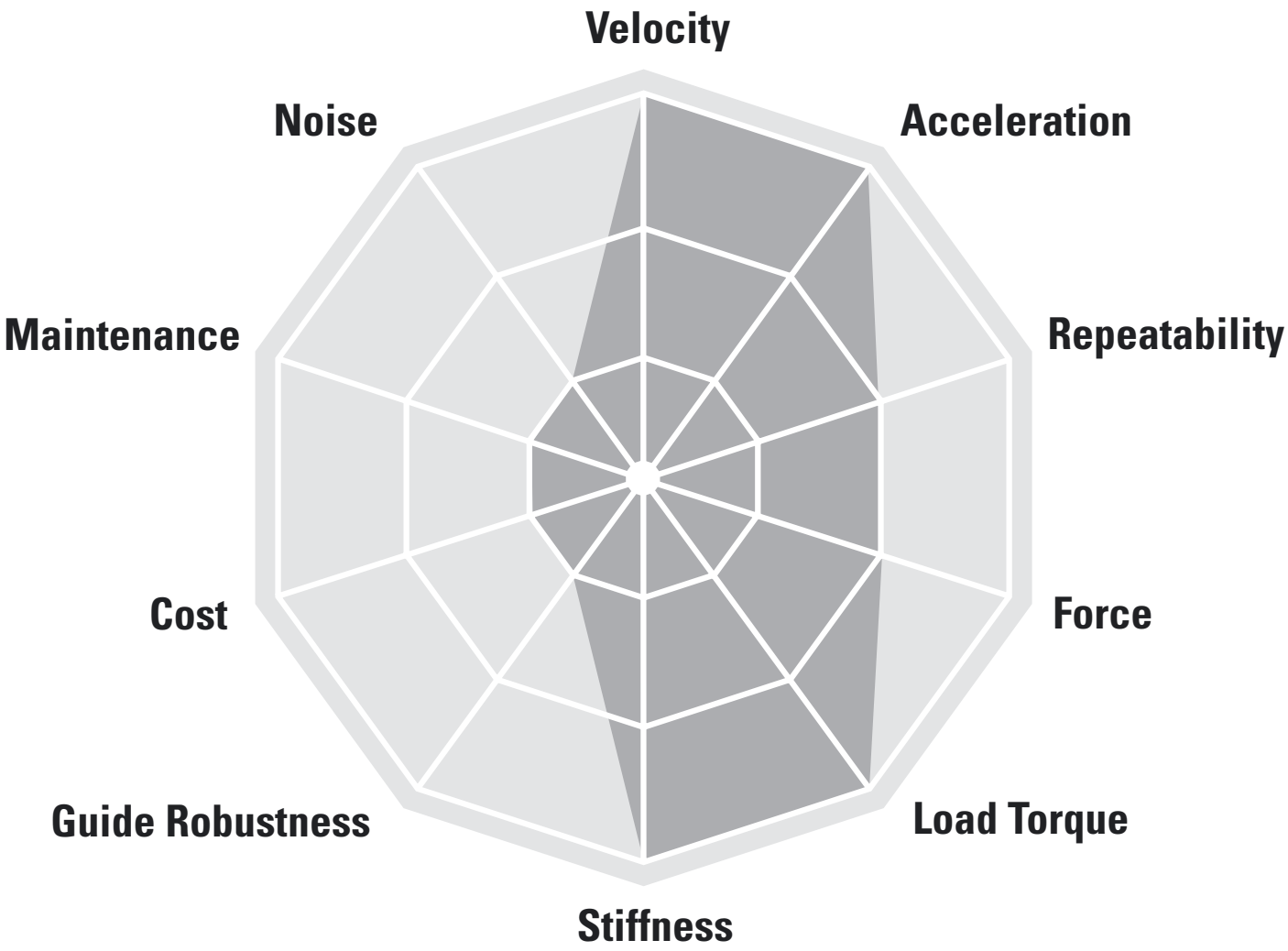

Typical Applications

Typical applications are where medium accuracy, speed and load capability is required. Typical examples are cutting, welding, glueing and assembly operations and in materials handling applications such as palletizing and pick and place operations.

Movopart M

M75

ForceLine **MLSM**


MLSM80Z

Features

- Can be installed in all directions
- Patented plastic cover band
- High load capabilities
- Low profile height

Parameter	MLSM80Z
Profile size (width × height) [mm]	240 × 85
Stroke length (S max), maximum [mm]	5900
Linear speed, maximum [m/s]	5,0
Dynamic carriage load (Fz), maximum [N]	6400
Remarks	
Page	74

WH40

Belt Drive, Ball Guide

» Ordering key - see page 201
» Accessories - see page 127
» Additional data - see page 184

General Specifications

Parameter	WH40
Profile size (w × h) [mm]	40 × 40
Type of belt	10 AT 5
Carriage sealing system	none
Adjustable belt tensioning	the belt can be retensioned by the customer if necessary
Lubrication	central lubrication of all parts that require lubrication
Included accessories	4 × mounting clamps

Performance Specifications

Parameter		WH40
Stroke length (S max), maximum	[mm]	2000
Linear speed, maximum	[m/s]	3,0
Acceleration, maximum	[m/s²]	40
Repeatability	[± mm]	0,05
Input speed, maximum	[rpm]	1800
Operation temperature limits	[°C]	0 – 80
Dynamic load (Fx), maximum	[N]	315[1]
Dynamic load (Fy), maximum	[N]	450[1] / 5300[2]
Dynamic load (Fz), maximum	[N]	600[1] / 6790[2]
Dynamic load torque (Mx), maximum	[Nm]	10[1] / 32[2]
Dynamic load torque (My), maximum	[Nm]	30[1] / 190[2]
Dynamic load torque (Mz), maximum	[Nm]	30[1] / 190[2]
Drive shaft force (Frd), maximum	[N]	100
Drive shaft torque (Mta), maximum	[Nm]	6
Pulley diameter	[mm]	31,83
Stroke per shaft revolution	[mm]	100
Weight	[kg]	
of unit with zero stroke		1,19
of every 100 mm of stroke		0,15
of each carriage		0,28

[1] Value for the complete unit, also see diagram Force Fx
[2] Value for the ball guide only

Carriage Idle Torque, (M idle) [Nm]

Input speed [rpm]	Idle torque [Nm]
150	0,1
900	0,3
1800	0,6

M idle = the input torque needed to move the carriage with no load on it.

Deflection of the Profile

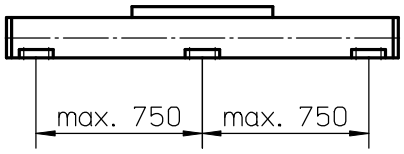

A mounting clamp must be installed at least at every 750 mm to be able to operate the maximum load. Less clamps may be required if less load is being operated, see the additional technical data for more information.

Force Fx as a Function of the Speed

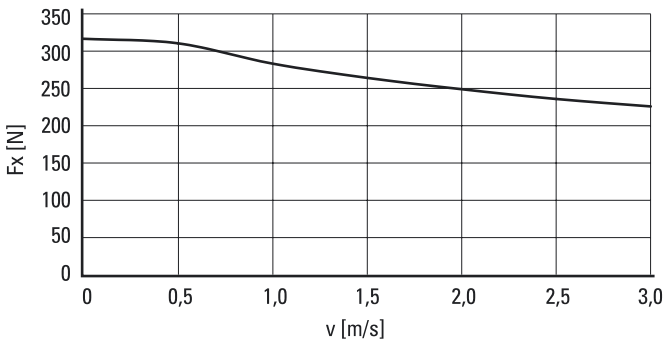

Definition of Forces

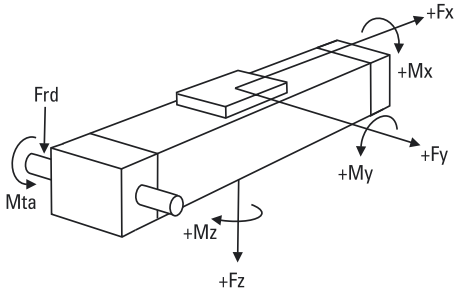

WH40

Belt Drive, Ball Guide

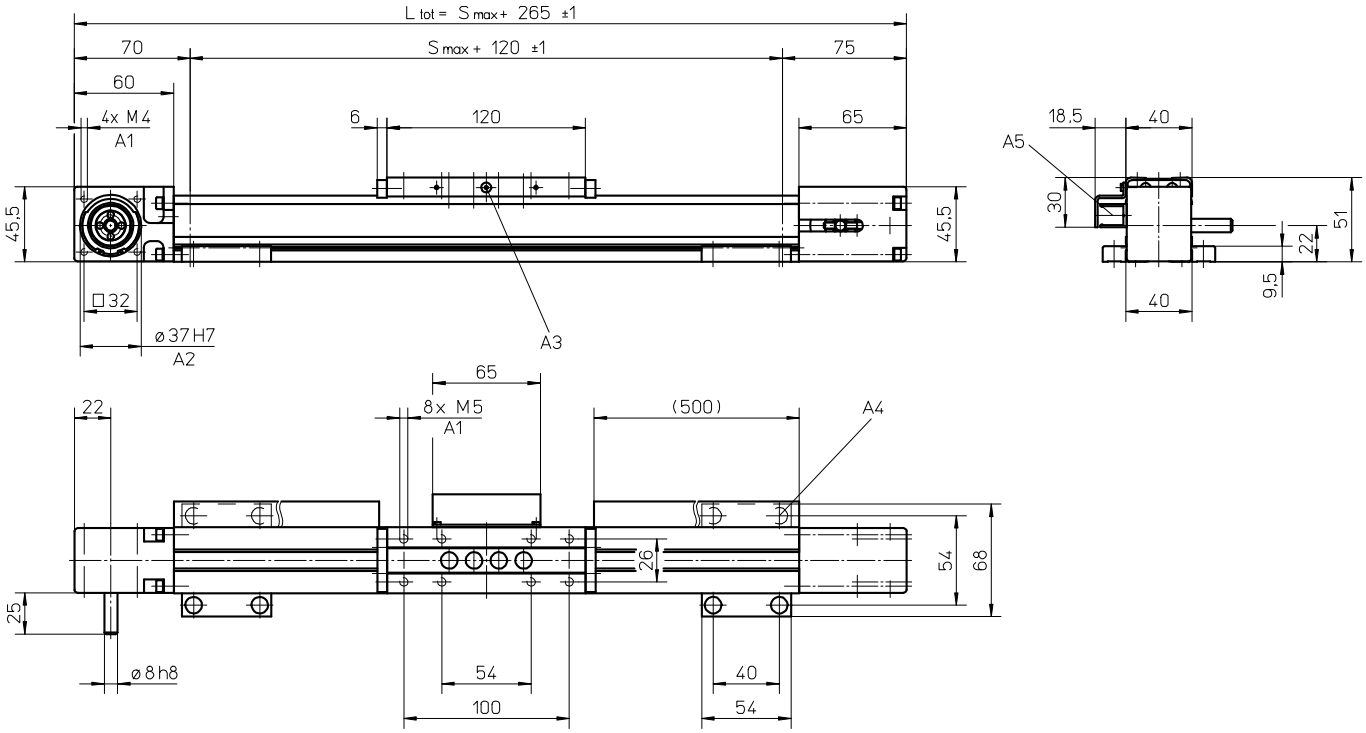

A1: depth 10
A2: depth 3
A3: lubricating nipple on both sides

A4: socket cap screw ISO4762-M5×12 8.8
A5: ENF inductive sensor rail option kit (optional)

Long Carriage

Parameter		WH40
Carriage length	[mm]	210
Dynamic load torque (My), maximum	[Nm]	50
Dynamic load torque (Mz), maximum	[Nm]	50
Weight	[kg]	0,43

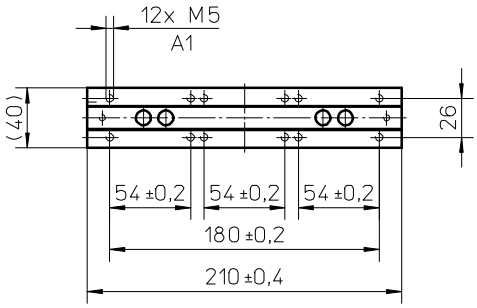

A1: depth 10

Double Carriages

Parameter		WH40
Minimum distance between carriages (L_A)	[mm]	135
Dynamic load (Fy), maximum	[N]	900
Dynamic load (Fz), maximum	[N]	1200
Dynamic load torque (My), maximum	[Nm]	L_A[1] × 0,45
Dynamic load torque (Mz), maximum	[Nm]	L_A[1] × 0,60
Force required to move second carriage	[N]	2
Total length (L tot)	[mm]	S max + 265 + L_A

[1] Value in mm

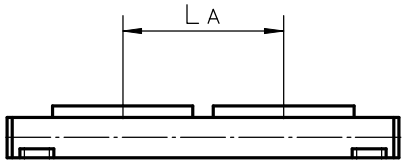

M55

Belt Drive, Ball Guide

» Ordering key - see page 201
» Accessories - see page 127
» Additional data - see page 184

General Specifications

Parameter	M55
Profile size (w × h) [mm]	58 × 55
Type of belt	22-STD SM5-HP
Carriage sealing system	self-adjusting steel cover band
Adjustable belt tensioning	the belt can be retensioned by the customer if necessary
Lubrication	lubrication of ball guide carriages
Included accessories	none

Performance Specifications

Parameter		M55
Stroke length (S max), maximum	[mm]	7000
Linear speed, maximum	[m/s]	5,0
Acceleration, maximum	[m/s²]	40
Repeatability	[± mm]	0,1
Input speed, maximum	[rpm]	2850
Operation temperature limits	[°C]	-20 – 70
Dynamic load (Fx), maximum < 2,5 m/s > 2,5 m/s	[N]	 400 200
Dynamic load (Fy), maximum	[N]	750[1] / 5435[2]
Dynamic load (Fz), maximum	[N]	750[1] / 6968[2]
Dynamic load torque (Mx), maximum	[Nm]	5[1] / 49[2]
Dynamic load torque (My), maximum	[Nm]	29[1] / 212[2]
Dynamic load torque (Mz), maximum	[Nm]	29[1] / 212[2]
Drive shaft force (Frd), maximum	[N]	200
Drive shaft torque (Mta), maximum	[Nm]	12
Pulley diameter	[mm]	33,42
Stroke per shaft revolution	[mm]	105
Weight of unit with zero stroke of every 100 mm of stroke of carriage	[kg]	 4,80 0,53 1,20

[1] Value for the complete unit
[2] Value for the ball guide only

Carriage Idle Torque (M idle) [Nm]

Input speed [rpm]	Single Carriage	Double Carriages
150	1,0	1,9

M idle = the input torque needed to move the carriage with no load on it.

Deflection of the Profile

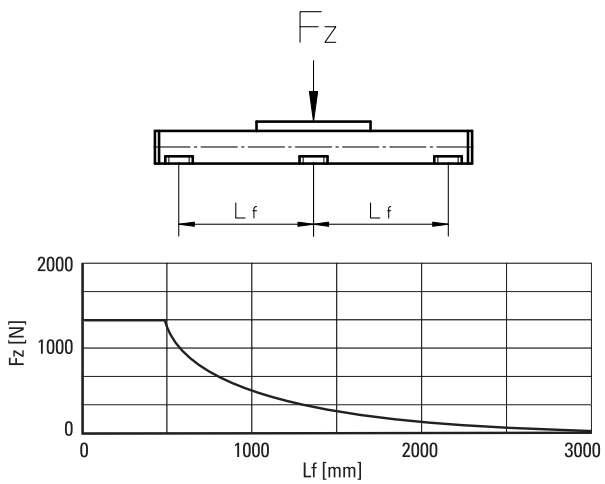

Definition of Forces

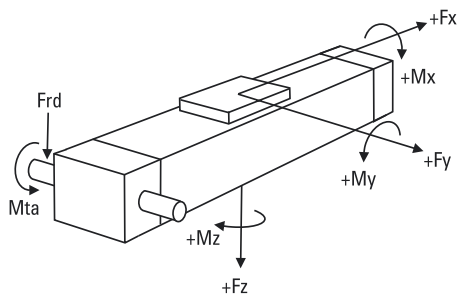

M55

Belt Drive, Ball Guide

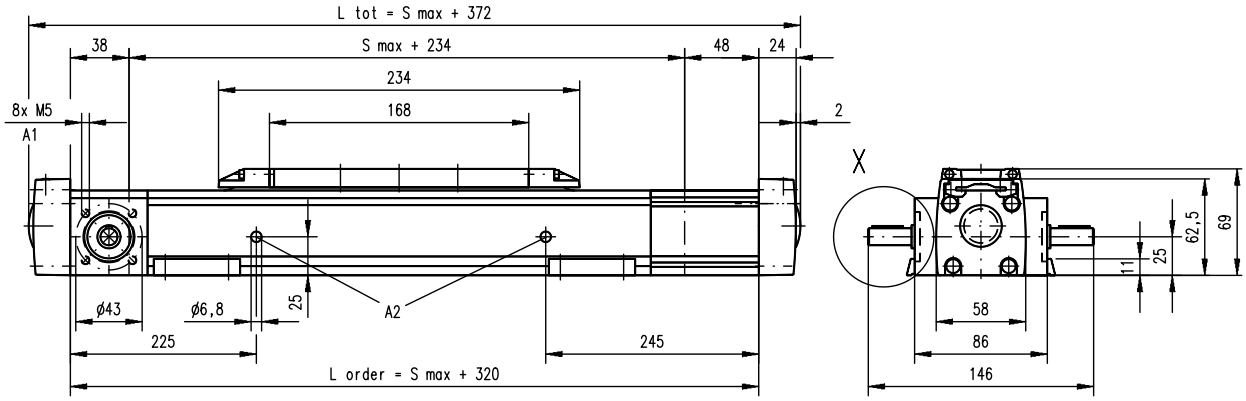

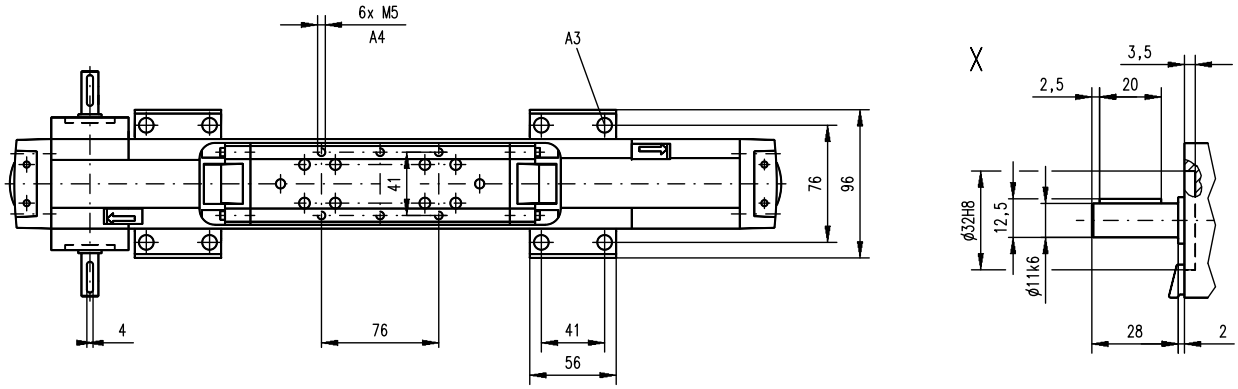

A1: depth 10, Heli coil
A2: lubrication holes

A3: ø9,5/ø5,5 for socket head cap screw M5
A4: depth 7,5 Heli coil

Double Carriages

Parameter		M55
Minimum distance between carriages (Lc)	[mm]	250
Dynamic load (Fy), maximum	[N]	1125
Dynamic load (Fz), maximum	[N]	1125
Dynamic load torque (My), maximum	[Nm]	Lc[1] × 0,56
Dynamic load torque (Mz), maximum	[Nm]	Lc[1] × 0,56
Force required to move second carriage	[N]	2
Ordering lenght (L order)	[mm]	S max + Lc + 320
Total length (L tot]	[mm]	L order + 52
Weight of unit with zero stroke of carriages	[kg]	 7,06 2,40

[1] Value in mm

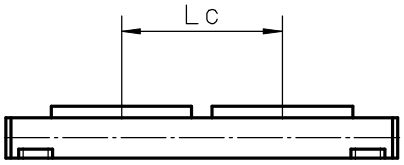

M75

Belt Drive, Ball Guide

» Ordering key - see page 201
» Accessories - see page 127
» Additional data - see page 184

General Specifications

Parameter	M75
Profile size (w × h) [mm]	86 × 75
Type of belt	STD5-40
Carriage sealing system	self-adjusting steel cover band
Adjustable belt tensioning	the belt can be retensioned by the customer if necessary
Lubrication	lubrication of ball guide carriages
Included accessories	none

Performance Specifications

Parameter		M75
Stroke length (S max), maximum	[mm]	12000
Linear speed, maximum	[m/s]	5,0
Acceleration, maximum	[m/s²]	40
Repeatability	[± mm]	0,1
Input speed, maximum	[rpm]	2300
Operation temperature limits	[°C]	-20 – 70
Dynamic load (Fx), maximum	[N]	
< 2,5 m/s		900
> 2,5 m/s		450
Dynamic load (Fy), maximum	[N]	1750[1] / 16413[2]
Dynamic load (Fz), maximum	[N]	1750[1] / 30968[2]
Dynamic load torque (Mx), maximum	[Nm]	16[1] / 150[2]
Dynamic load torque (My), maximum	[Nm]	84[1] / 743[2]
Dynamic load torque (Mz), maximum	[Nm]	84[1] / 787[2]
Drive shaft force (Frd), maximum	[N]	600
Drive shaft torque (Mta), maximum	[Nm]	30
Pulley diameter	[mm]	41,38
Stroke per shaft revolution	[mm]	130
Weight	[kg]	
of unit with zero stroke		7,50
of every 100 mm of stroke		0,88
of carriage		2,00

[1] Value for the complete unit
[2] Value for the ball guide only

Carriage Idle Torque (M idle) [Nm]

Input speed [rpm]	Single Carriage	Double Carriages
150	1,0	1,9

M idle = the input torque needed to move the carriage with no load on it.

Deflection of the Profile

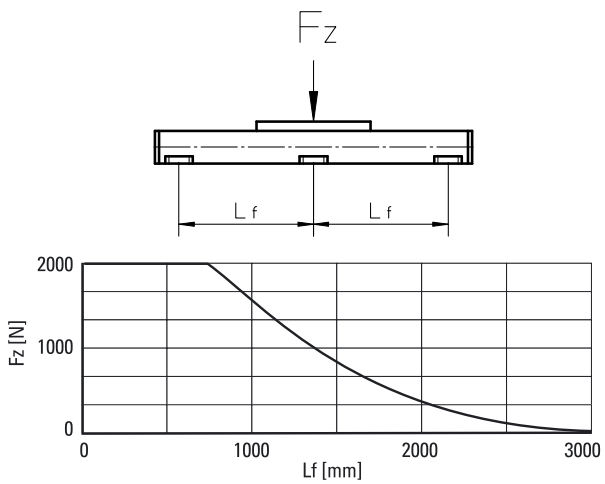

Definition of Forces

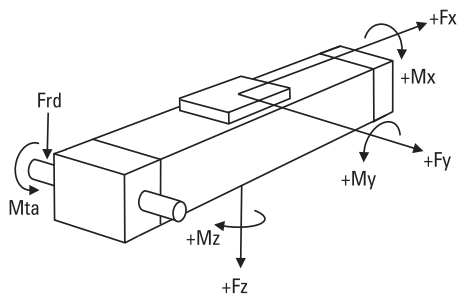

M75

Belt Drive, Ball Guide

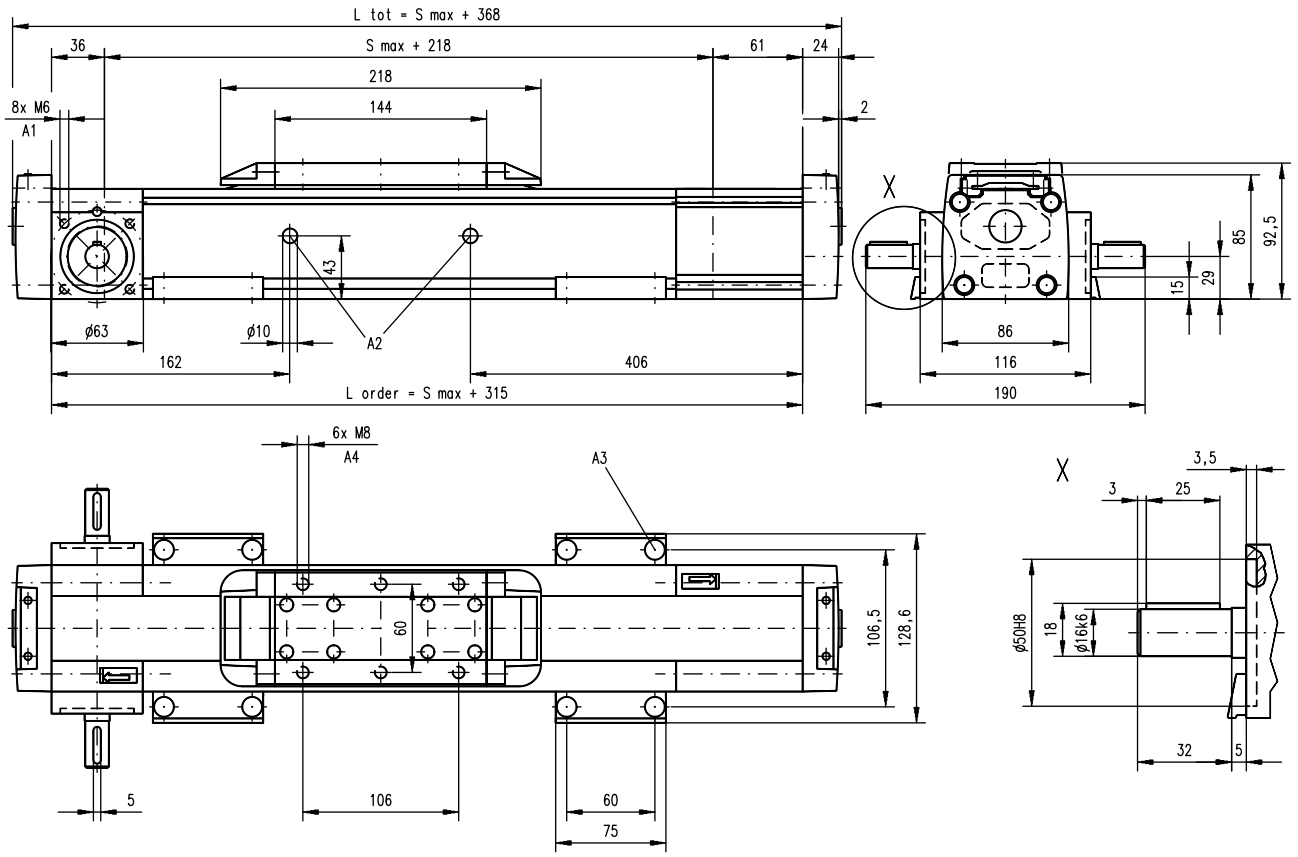

A1: depth 9, Heli coil
A2: lubrication holes
A3: ø13,5/ø8,5 for socket head cap screw M8
A4: depth 8, Heli coil

Double Carriages

Parameter		M75
Minimum distance between carriages (Lc)	[mm]	250
Dynamic load (Fy), maximum	[N]	2625
Dynamic load (Fz), maximum	[N]	2625
Dynamic load torque (My), maximum	[Nm]	Lc[1] × 1,313
Dynamic load torque (Mz), maximum	[Nm]	Lc[1] × 1,313
Force required to move second carriage	[N]	2
Ordering lenght (L order)	[mm]	S max + Lc + 315
Total length (L tot]	[mm]	L order + 52
Weight of unit with zero stroke of carriages	[kg]	 11,67 4,00

[1] Value in mm

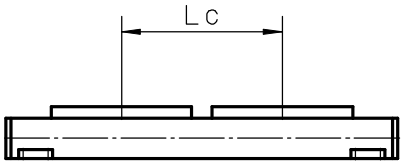

M100

Belt Drive, Ball Guide

» Ordering key - see page 201
» Accessories - see page 127
» Additional data - see page 184

General Specifications

Parameter	M100
Profile size (w × h) [mm]	108 × 100
Type of belt	STD8-50
Carriage sealing system	self-adjusting steel cover band
Adjustable belt tensioning	the belt can be retensioned by the customer if necessary
Lubrication	lubrication of ball guide carriages
Included accessories	none

Performance Specifications

Parameter		M100
Stroke length (S max), maximum	[mm]	12000
Linear speed, maximum	[m/s]	5,0
Acceleration, maximum	[m/s²]	40
Repeatability	[± mm]	0,1
Input speed, maximum	[rpm]	1700
Operation temperature limits	[°C]	-20 – 70
Dynamic load (Fx), maximum < 2,5 m/s > 2,5 m/s	[N]	 1250 625
Dynamic load (Fy), maximum	[N]	4000[1] / 26378[2]
Dynamic load (Fz), maximum	[N]	4000[1] / 49770[2]
Dynamic load torque (Mx), maximum	[Nm]	43[1] / 283[2]
Dynamic load torque (My), maximum	[Nm]	280[1] / 1742[2]
Dynamic load torque (Mz), maximum	[Nm]	280[1] / 1846[2]
Drive shaft force (Frd), maximum	[N]	1000
Drive shaft torque (Mta), maximum	[Nm]	45
Pulley diameter	[mm]	56,02
Stroke per shaft revolution	[mm]	176
Weight of unit with zero stroke of every 100 mm of stroke of carriage	[kg]	 11,61 1,43 2,20

Carriage Idle Torque (M idle) [Nm]

Input speed [rpm]	Single Carriage	Double Carriages
150	1,6	3,1

M idle = the input torque needed to move the carriage with no load on it.

Deflection of the Profile

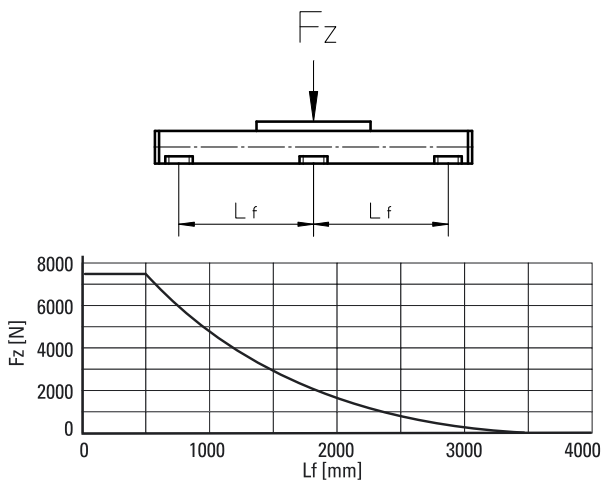

Definition of Forces

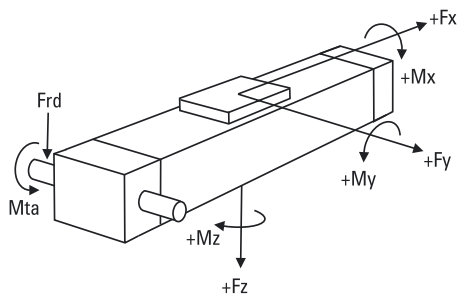

M100

Belt Drive, Ball Guide

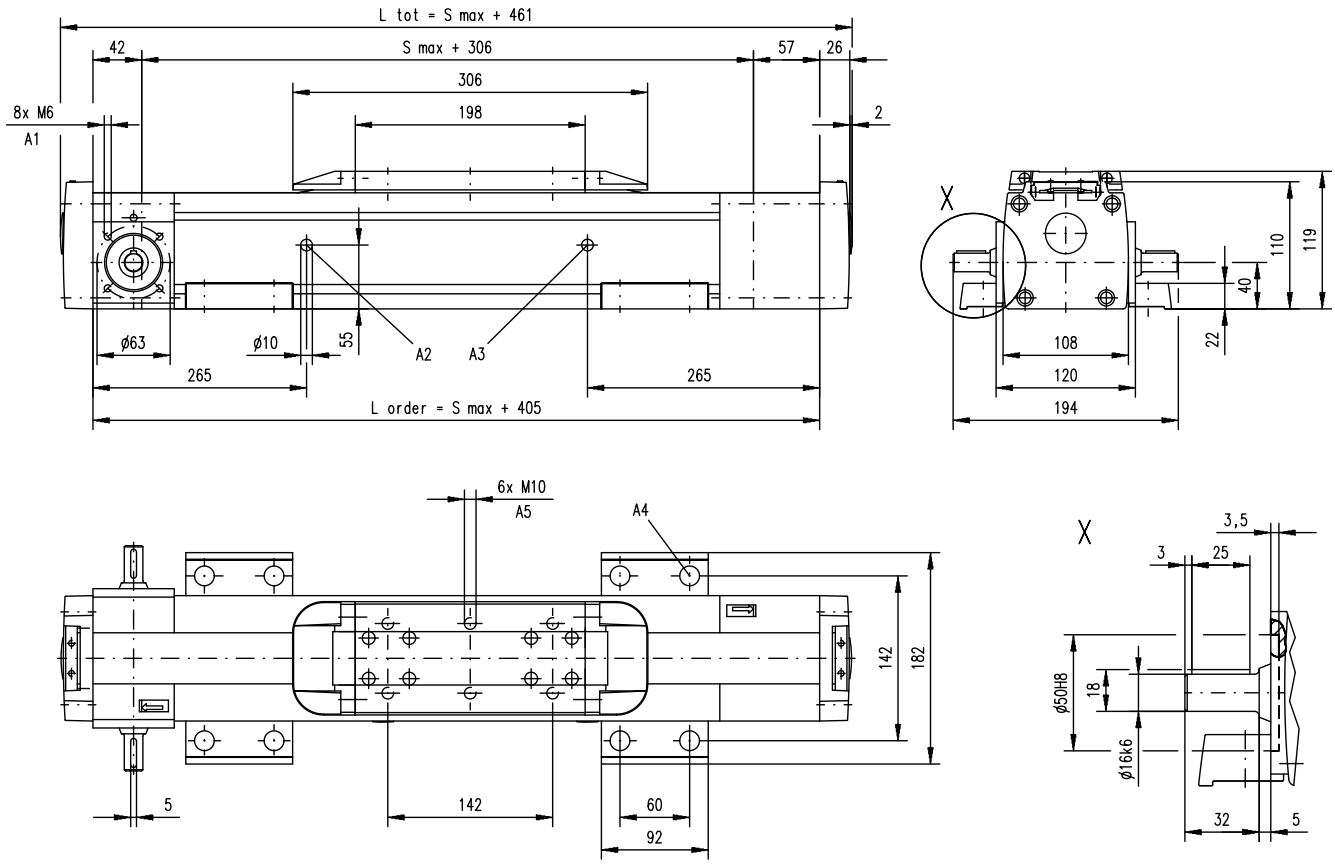

A1: depth 9, Heli coil
A2: lubrication hole
A3: lubrication hole (no hole if L order is < 856 mm)
A4: ø17/ø10,5 for socket head cap screw M10

Double Carriages

Parameter		M100
Minimum distance between carriages (Lc)	[mm]	350
Dynamic load (Fy), maximum	[N]	6000
Dynamic load (Fz), maximum	[N]	6000
Dynamic load torque (My), maximum	[Nm]	Lc[1] × 3
Dynamic load torque (Mz), maximum	[Nm]	Lc[1] × 3
Force required to move second carriage	[N]	2
Ordering lenght (L order)	[mm]	S max + Lc + 405
Total length (L tot]	[mm]	L order + 56
Weight of unit with zero stroke of carriagess	[kg]	 18,92 4,40

[1] Value in mm

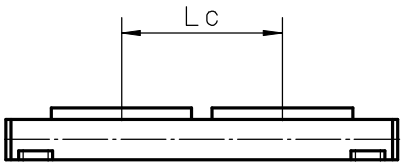

MLSM80Z

Belt Drive, Ball Guide

» Ordering key - see page 202
» Accessories - see page 127
» Additional data - see page 184

General Specifications

Parameter	MLSM80Z
Profile size (w × h) [mm]	240 × 85
Type of belt	75 ATL 10
Carriage sealing system	plastic cover band
Adjustable belt tensioning	the belt can be retensioned by the customer if necessary
Lubrication	central lubrication of all parts that require lubrication
Included accessories	4 × mounting clamps

Performance Specifications

Parameter		MLSM80Z
Stroke length (S max), maximum	[mm]	5900
Linear speed, maximum	[m/s]	5,0
Acceleration, maximum	[m/s²]	20
Repeatability	[± mm]	0,05
Input speed, maximum	[rpm]	1500
Operation temperature limits	[°C]	0 – 80
Dynamic load (Fx), maximum	[N]	5000[3]
Dynamic load (Fy), maximum	[N]	6400[1] / 71860[2]
Dynamic load (Fz), maximum	[N]	6400[1] / 71860[2]
Dynamic load torque (Mx), maximum	[Nm]	600[1] / 5890[2]
Dynamic load torque (My), maximum	[Nm]	720[1] / 6640[2]
Dynamic load torque (Mz), maximum	[Nm]	720[1] / 6640[2]
Drive shaft force (Frd), maximum	[N]	700
Drive shaft torque (Mta), maximum	[Nm]	150
Pulley diameter	[mm]	63,66
Stroke per shaft revolution	[mm]	200
Weight	[kg]	
of unit with zero stroke		30,8
of every 100 mm of stroke		2,2
of each carriage		9,6

[1] Value for the complete unit
[2] Value for the ball guide only
[3] See diagram Force Fx

Carriage Idle Torque, (M idle) [Nm]

Input speed [rpm]	Idle torque [Nm]
150	8,5
750	12
1500	14,5

M idle = the input torque needed to move the carriage with no load on it.

Deflection of the Profile

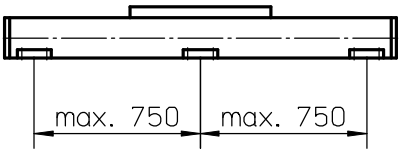

A mounting clamp must be installed at least at every 750 mm to be able to operate the maximum load. Less clamps may be required if less load is being operated, see the additional technical data for more information.

Force Fx as a Function of the Speed

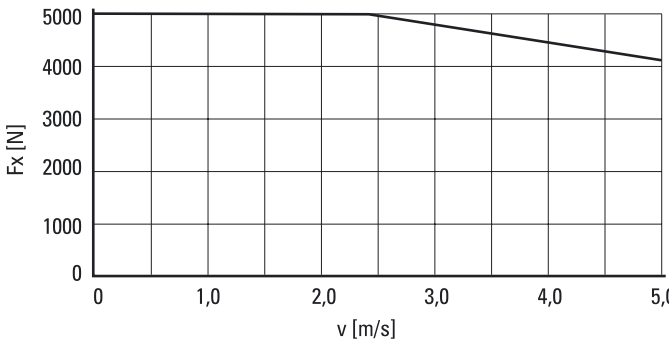

Definition of Forces

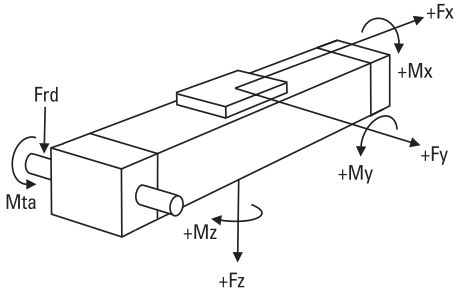

MLSM80Z

Belt Drive, Ball Guide

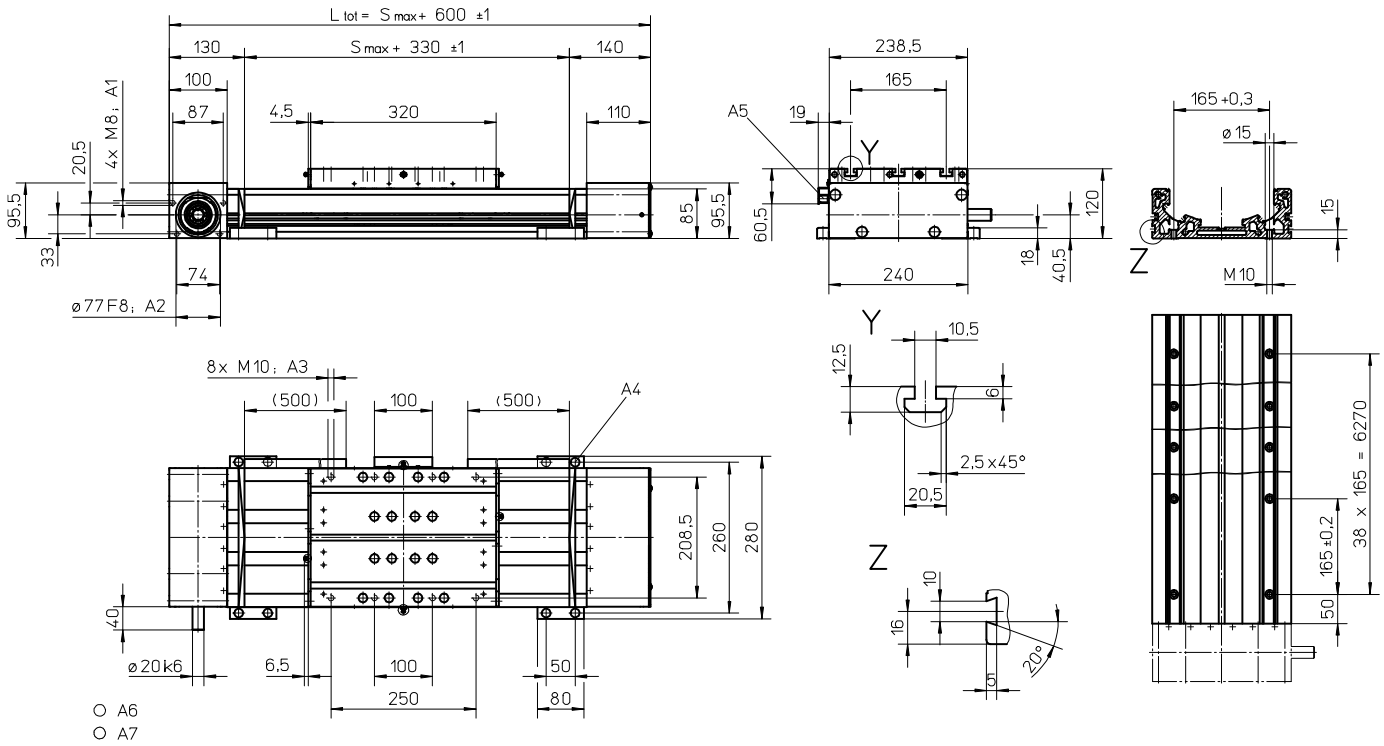

A1: depth 18
A2: depth 4
A3: depth 15
A4: socket cap screw ISO4762-M8×20 8.8
A5: ENF inductive sensor rail option kit (optional)
A6: tapered lubricating nipple to DIN71412 M8×1 on fixed-bearing side as standard feature
A7: can be changed over to one of the three alternative lubricating points by the customer

Long Carriage

Parameter		MLSM80Z
Carriage length	[mm]	500
Dynamic load torque (My), maximum	[Nm]	1400
Dynamic load torque (Mz), maximum	[Nm]	1400
Weight	[kg]	14

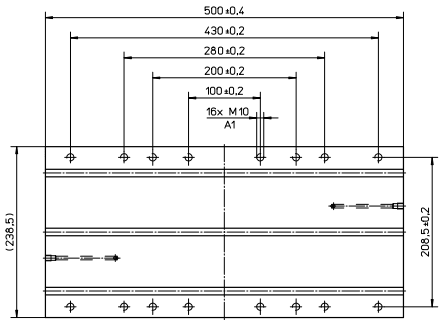

A1: depth 15

Double Carriages

Parameter		MLSM80Z
Minimum distance between carriages (L_A)	[mm]	400
Dynamic load (Fy), maximum	[N]	12800
Dynamic load (Fz), maximum	[N]	12800
Dynamic load torque (My), maximum	[Nm]	L_A[1] × 6,4
Dynamic load torque (Mz), maximum	[Nm]	L_A[1] × 6,4
Force required to move second carriage	[N]	350
Total length (L tot)	[mm]	S max + 600 + L_A

[1] Value in mm

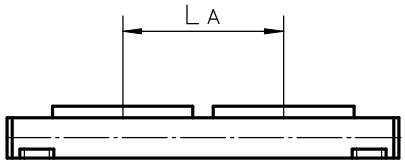

Linear Units with Belt Drive and Slide Guide

Movopart

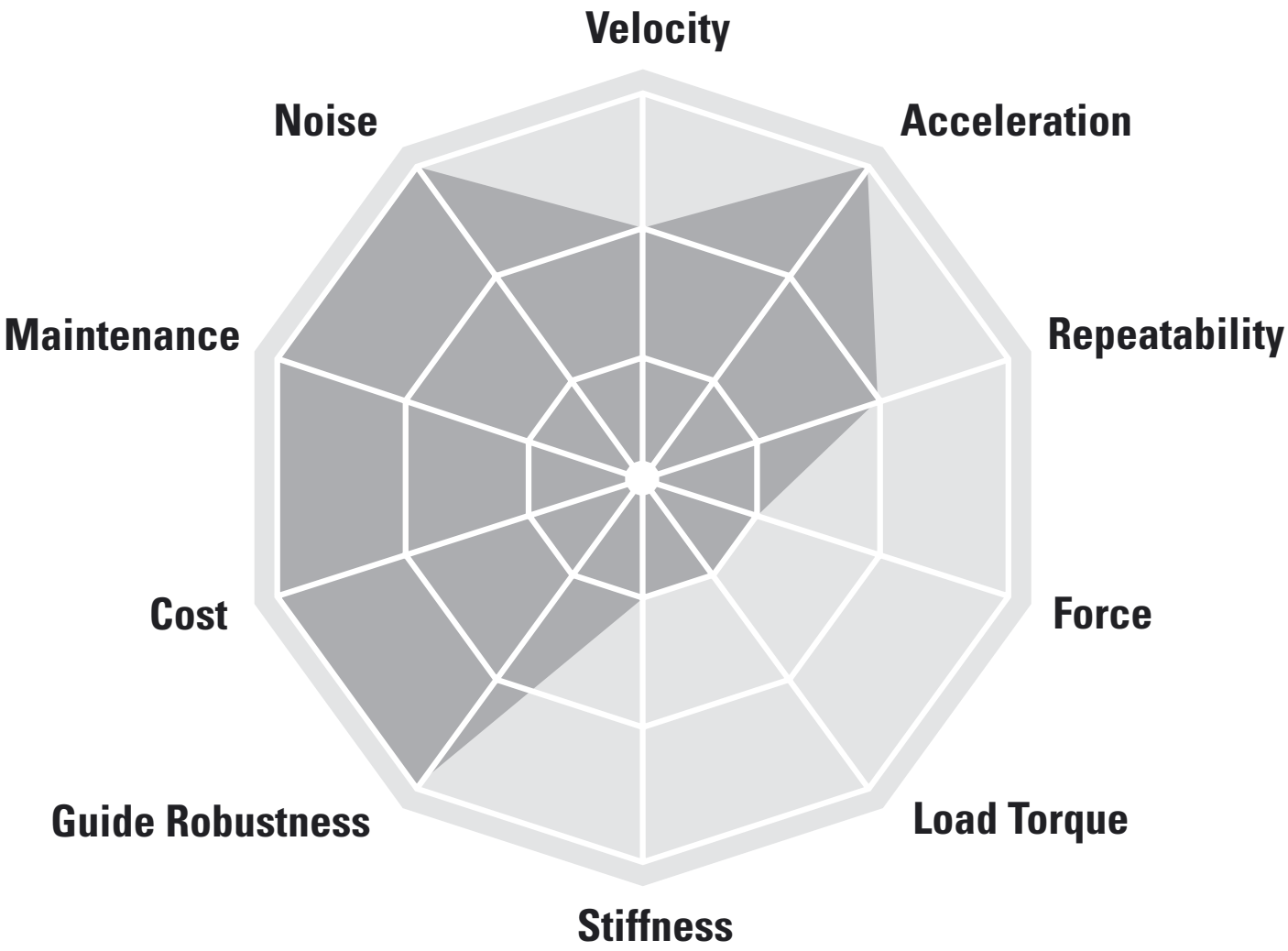

Typical Applications

Typical applications are where low loads need to be moved at medium speed and high acceleration at low cost. These units are suited to harsh environments. Typical examples are for machines in the food, chemical, paper and wood working industry, in materials handling, cutting, scanning and printing applications.

Movopart M


M50

Features

- Can be installed in all directions
- Patented self-adjusting prism slide guides
- Resistant to shock loads and vibrations
- Low cost

Parameter	M50
Profile size (width × height) [mm]	50 × 50
Stroke length (S max), maximum [mm]	5000
Linear speed, maximum [m/s]	5,0
Dynamic carriage load (Fz), maximum [N]	400
Remarks	no cover band
Page	80

Movopart M

Features

- Can be installed in all directions
- Self-adjusting stainless steel cover band
- Patented self-adjusting prism slide guides
- Wash down and chemical protected versions available

Parameter		M55	M75	M100
Profile size (width × height)	[mm]	58 × 55	86 × 75	108 × 100
Stroke length (S max), maximum	[mm]	7000	12000	12000
Linear speed, maximum	[m/s]	5,0	5,0	5,0
Dynamic carriage load (Fz), maximum	[N]	400	1485	3005
Remarks				
Page		82	84	86

M50

Belt Drive, Slide Guide

» Ordering key - see page 203
» Accessories - see page 127
» Additional data - see page 185

General Specifications

Parameter	M50
Profile size (w × h) [mm]	50 × 50
Type of belt	GT 5MR
Carriage sealing system	none
Adjustable belt tensioning	the belt can be retensioned by the customer if necessary
Lubrication	lubricated for life
Included accessories	none

Performance Specifications

Parameter		M50
Stroke length (S max), maximum	[mm]	5000
Linear speed, maximum	[m/s]	5,0
Acceleration, maximum	[m/s²]	40
Repeatability	[± mm]	0,2
Input speed, maximum	[rpm]	2300
Operation temperature limits	[°C]	-20 – 70
Dynamic load (Fx), maximum < 2,5 m/s > 2,5 m/s	[N]	 400 200
Dynamic load (Fy), maximum	[N]	400[1]
Dynamic load (Fz), maximum	[N]	400[1]
Dynamic load torque (Mx), maximum	[Nm]	5[1]
Dynamic load torque (My), maximum	[Nm]	21[1]
Dynamic load torque (Mz), maximum	[Nm]	21[1]
Drive shaft force (Frd), maximum	[N]	350
Drive shaft torque (Mta), maximum	[Nm]	10
Pulley diameter	[mm]	41,38
Stroke per shaft revolution	[mm]	130
Weight of unit with zero stroke of every 100 mm of stroke of carriage	[kg]	 0,71 0,96 0,33

[1] Value for the complete unit

Carriage Idle Torque (M idle) [Nm]

Input speed [rpm]	Idle torque [Nm]
150	2,1

M idle = the input torque needed to move the carriage with no load on it.

Deflection of the Profile

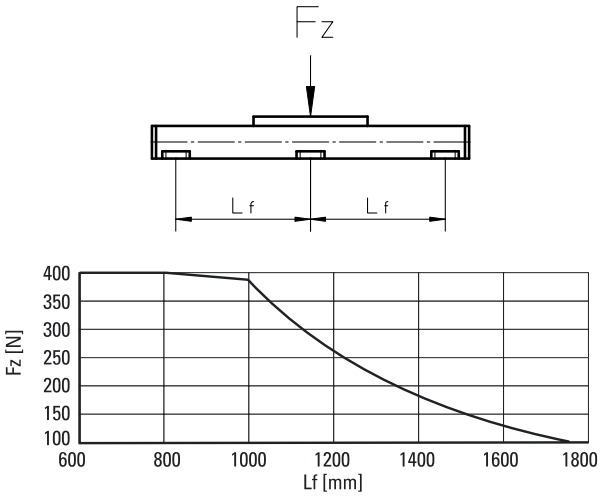

Definition of Forces

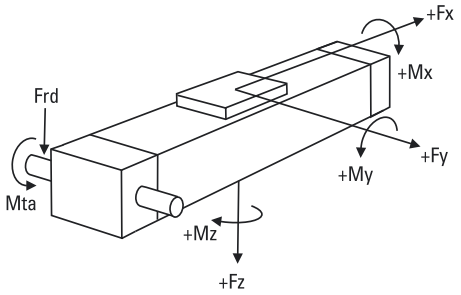

M50

Belt Drive, Slide Guide

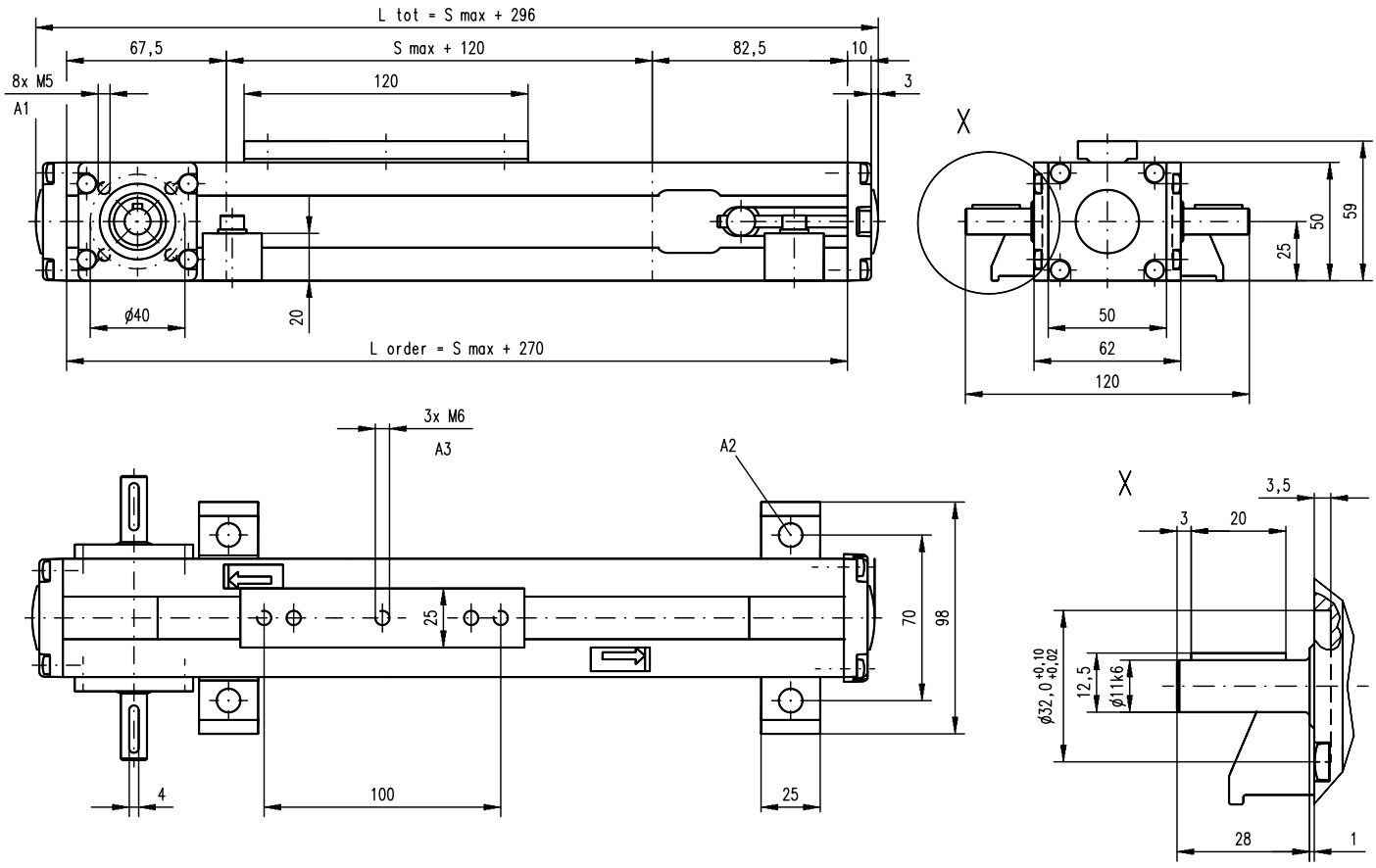

A1: depth 8,5
A2: ø6,5 for M6 screw
A3: depth 9, Heli coil

M55

Belt Drive, Slide Guide

» Ordering key - see page 203
» Accessories - see page 127
» Additional data - see page 185

General Specifications

Parameter	M55
Profile size (w × h) [mm]	58 × 50
Type of belt	22-STD SM5-HP
Carriage sealing system	self-adjusting steel cover band
Adjustable belt tensioning	the belt can be retensioned by the customer if necessary
Lubrication	lubricated for life
Included accessories	none

Performance Specifications

Parameter		M55
Stroke length (S max), maximum	[mm]	7000
Linear speed, maximum	[m/s]	5,0
Acceleration, maximum	[m/s²]	40
Repeatability	[± mm]	0,2
Input speed, maximum	[rpm]	2850
Operation temperature limits	[°C]	-20 – 70
Dynamic load (Fx), maximum < 2,5 m/s > 2,5 m/s	[N]	 400 200
Dynamic load (Fy), maximum	[N]	400[1]
Dynamic load (Fz), maximum	[N]	400[1]
Dynamic load torque (Mx), maximum	[Nm]	9[1]
Dynamic load torque (My), maximum	[Nm]	21[1]
Dynamic load torque (Mz), maximum	[Nm]	21[1]
Drive shaft force (Frd), maximum	[N]	200
Drive shaft torque (Mta), maximum	[Nm]	7
Pulley diameter	[mm]	33,42
Stroke per shaft revolution	[mm]	105
Weight of unit with zero stroke of every 100 mm of stroke of carriage	[kg]	 4,10 0,41 1,10

[1] Value for the complete unit

Carriage Idle Torque (M idle) [Nm]

Input speed [rpm]	Single Carriage	Double Carriages
150	2,1	3,8

M idle = the input torque needed to move the carriage with no load on it.

Deflection of the Profile

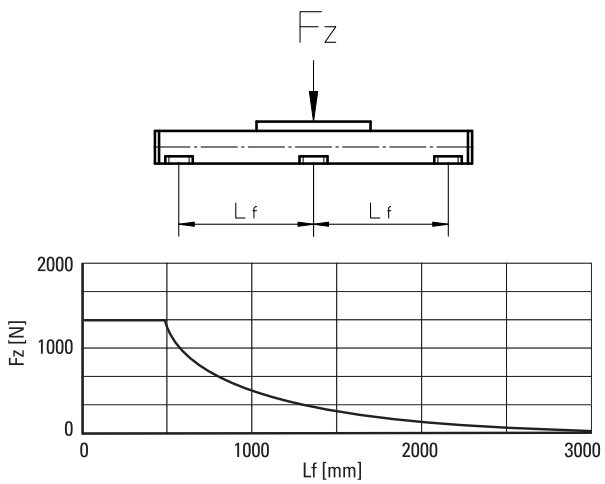

Definition of Forces

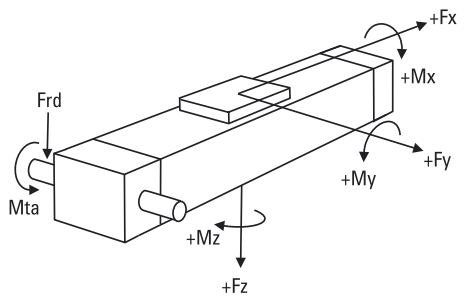

M55

Belt Drive, Slide Guide

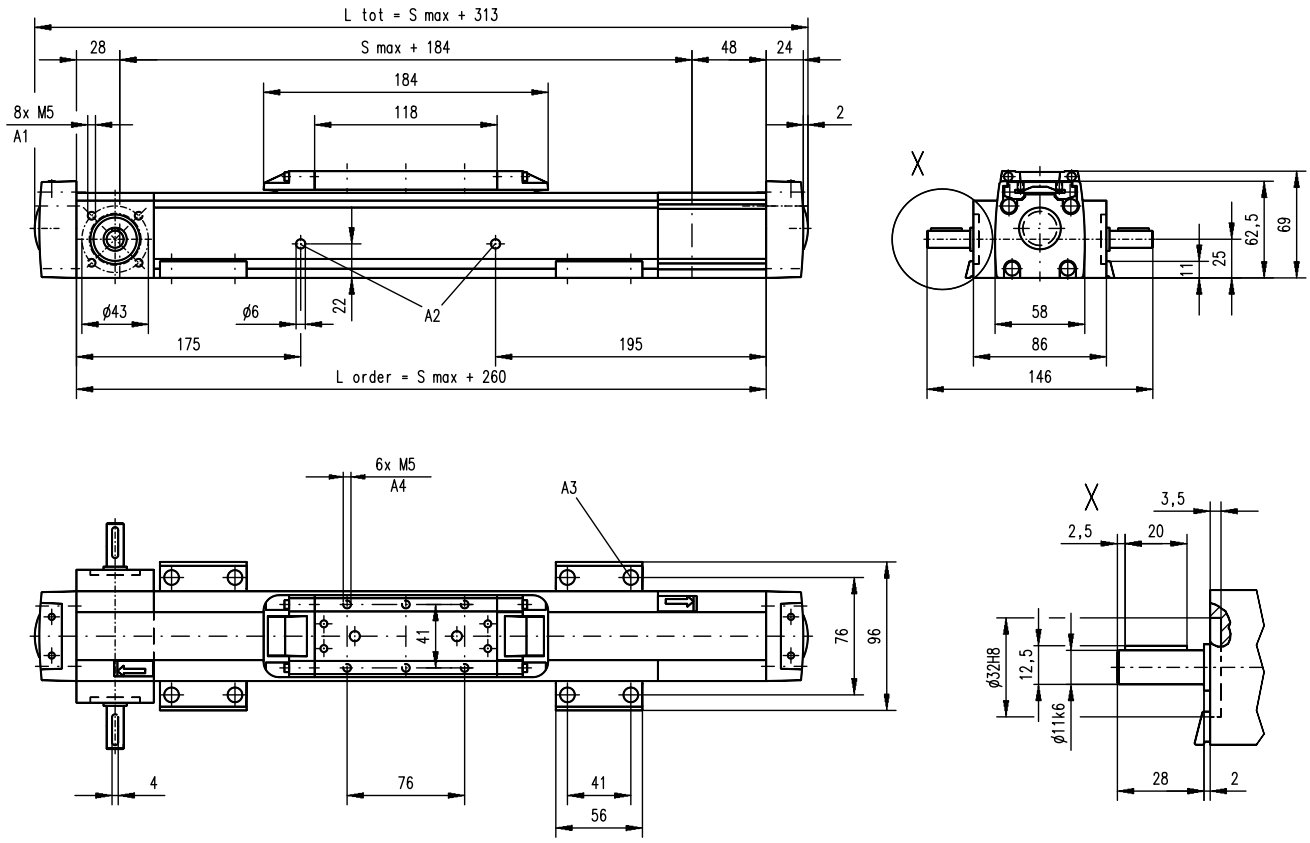

A1: depth 10, Heli coil
A2: lubrication holes

A3: ø9,5/ø5,5 for socket head cap screw M5
A4: depth 7,5, Heli coil

Double Carriages

Parameter		M55
Minimum distance between carriages (Lc)	[mm]	200
Dynamic load (Fy), maximum	[N]	600
Dynamic load (Fz), maximum	[N]	600
Dynamic load torque (My), maximum	[Nm]	Lc[1] × 0,3
Dynamic load torque (Mz), maximum	[Nm]	Lc[1] × 0,3
Force required to move second carriage	[N]	35
Ordering lenght (L order)	[mm]	S max + Lc + 260
Total length (L tot]	[mm]	L order + 53
Weight of unit with zero stroke of carriages	[kg]	 6,00 2,20

[1] Value in mm

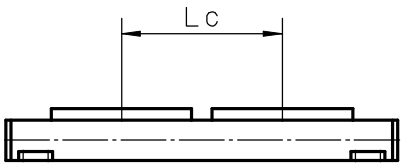

M75

Belt Drive, Slide Guide

» Ordering key - see page 203
» Accessories - see page 127
» Additional data - see page 185

General Specifications

Parameter	M75
Profile size (w × h) [mm]	86 × 75
Type of belt	STD5-40
Carriage sealing system	self-adjusting steel cover band
Adjustable belt tensioning	the belt can be retensioned by the customer if necessary
Lubrication	lubricated for life
Included accessories	none

Performance Specifications

Parameter		M75
Stroke length (S max), maximum	[mm]	12000
Linear speed, maximum	[m/s]	5,0
Acceleration, maximum	[m/s²]	40
Repeatability	[± mm]	0,2
Input speed, maximum	[rpm]	2300
Operation temperature limits	[°C]	-20 – 70
Dynamic load (Fx), maximum < 2,5 m/s > 2,5 m/s	[N]	 900 450
Dynamic load (Fy), maximum	[N]	1485[1]
Dynamic load (Fz), maximum	[N]	1485[1]
Dynamic load torque (Mx), maximum	[Nm]	49[1]
Dynamic load torque (My), maximum	[Nm]	85[1]
Dynamic load torque (Mz), maximum	[Nm]	85[1]
Drive shaft force (Frd), maximum	[N]	600
Drive shaft torque (Mta), maximum	[Nm]	30
Pulley diameter	[mm]	41,38
Stroke per shaft revolution	[mm]	130
Weight of unit with zero stroke of every 100 mm of stroke of carriage	[kg]	 6,30 0,67 1,50

[1] Value for the complete unit

Carriage Idle Torque (M idle) [Nm]

Input speed [rpm]	Single Carriage	Double Carriages
150	2,2	4,0

M idle = the input torque needed to move the carriage with no load on it.

Deflection of the Profile

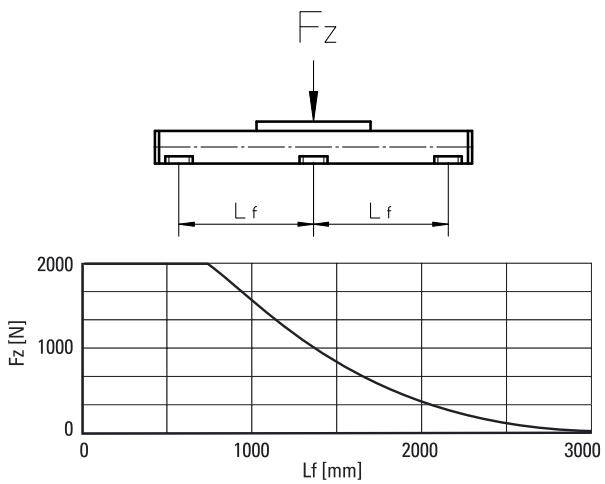

Definition of Forces

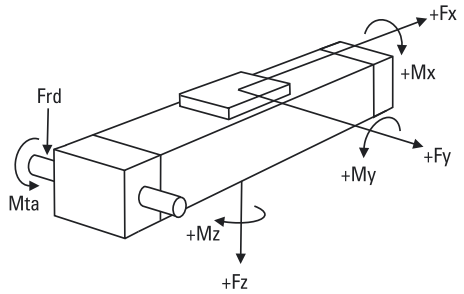

M75

Belt Drive, Slide Guide

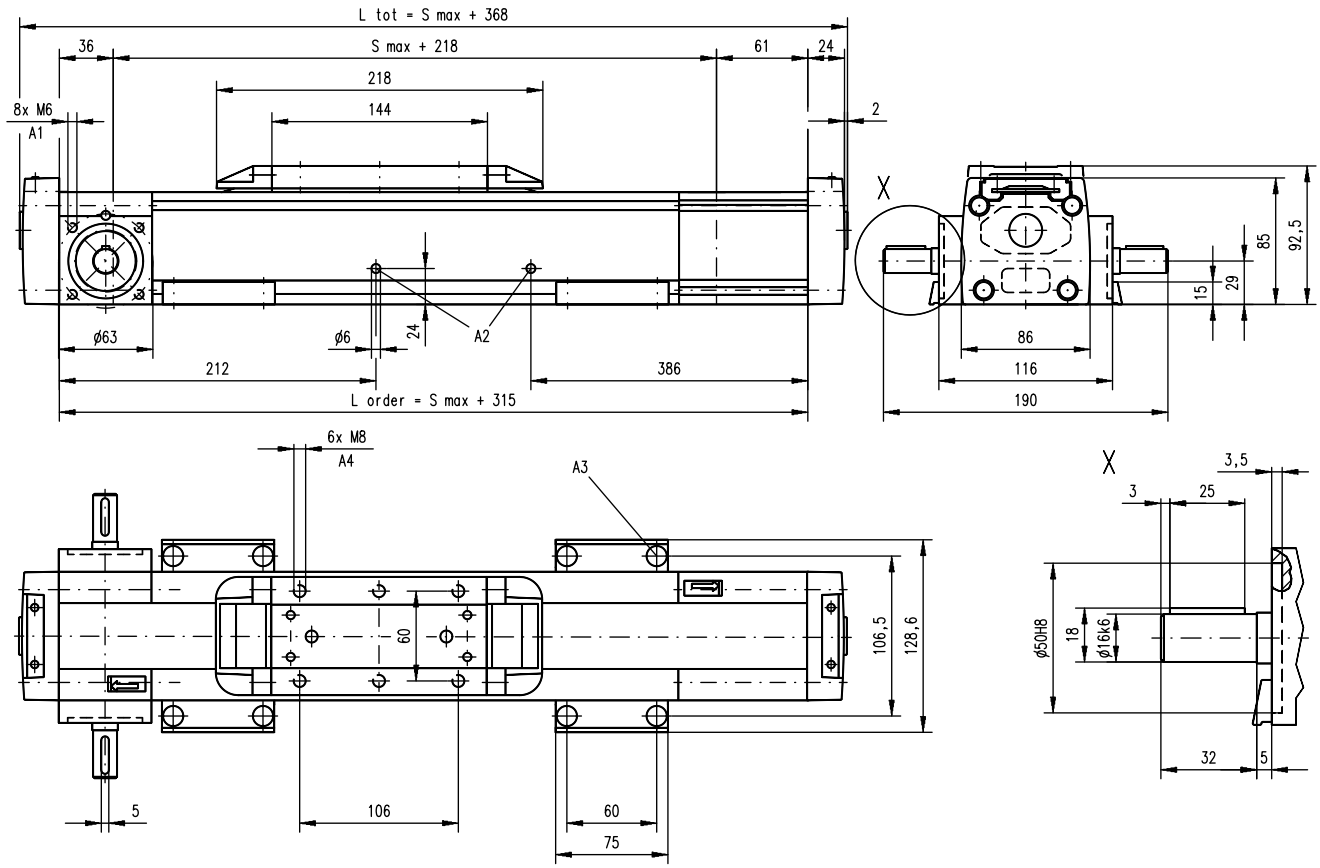

A1: depth 9, Heli coil
A2: lubrication holes
A3: ø13,5/ø8,5 for socket head cap screw M8
A4: depth 8, Heli coil

Double Carriages

Parameter		M75
Minimum distance between carriages (Lc)	[mm]	250
Dynamic load (Fy), maximum	[N]	2227
Dynamic load (Fz), maximum	[N]	2227
Dynamic load torque (My), maximum	[Nm]	Lc[1] × 1,114
Dynamic load torque (Mz), maximum	[Nm]	Lc[1] × 1,114
Force required to move second carriage	[N]	40
Ordering lenght (L order)	[mm]	S max + Lc + 315
Total length (L tot]	[mm]	L order + 53
Weight of unit with zero stroke of carriages	[kg]	 9,50 3,00

[1] Value in mm

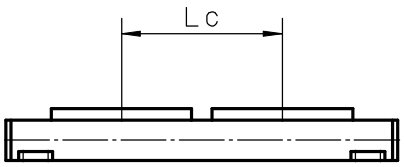

M100

Belt Drive, Slide Guide

» Ordering key - see page 203
» Accessories - see page 127
» Additional data - see page 185

General Specifications

Parameter	M100
Profile size (w × h) [mm]	108 × 100
Type of belt	STD8-50
Carriage sealing system	self-adjusting steel cover band
Adjustable belt tensioning	the belt can be retensioned by the customer if necessary
Lubrication	lubricated for life
Included accessories	none

Performance Specifications

Parameter		M100
Stroke length (S max), maximum	[mm]	12000
Linear speed, maximum	[m/s]	5,0
Acceleration, maximum	[m/s²]	40
Repeatability	[± mm]	0,2
Input speed, maximum	[rpm]	1700
Operation temperature limits	[°C]	-20 – 70
Dynamic load (Fx), maximum < 2,5 m/s > 2,5 m/s	[N]	 1250 625
Dynamic load (Fy), maximum	[N]	3005[1]
Dynamic load (Fz), maximum	[N]	3005[1]
Dynamic load torque (Mx), maximum	[Nm]	117[1]
Dynamic load torque (My), maximum	[Nm]	279[1]
Dynamic load torque (Mz), maximum	[Nm]	279[1]
Drive shaft force (Frd), maximum	[N]	1000
Drive shaft torque (Mta), maximum	[Nm]	45
Pulley diameter	[mm]	56,02
Stroke per shaft revolution	[mm]	176
Weight of unit with zero stroke of every 100 mm of stroke of carriage	[kg]	 11,10 1,16 2,40

[1] Value for the complete unit

Carriage Idle Torque (M idle) [Nm]

Input speed [rpm]	Single Carriage	Double Carriages
150	3,8	5,8

M idle = the input torque needed to move the carriage with no load on it.

Deflection of the Profile

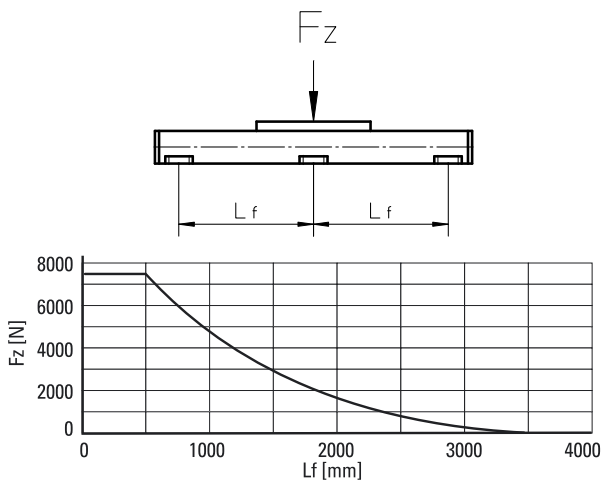

Definition of Forces

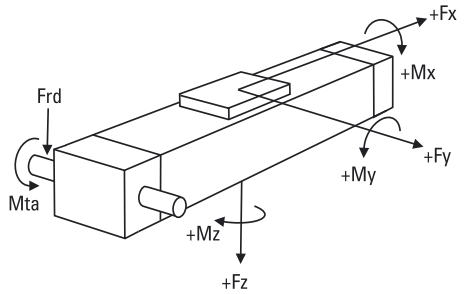

M100

Belt Drive, Slide Guide

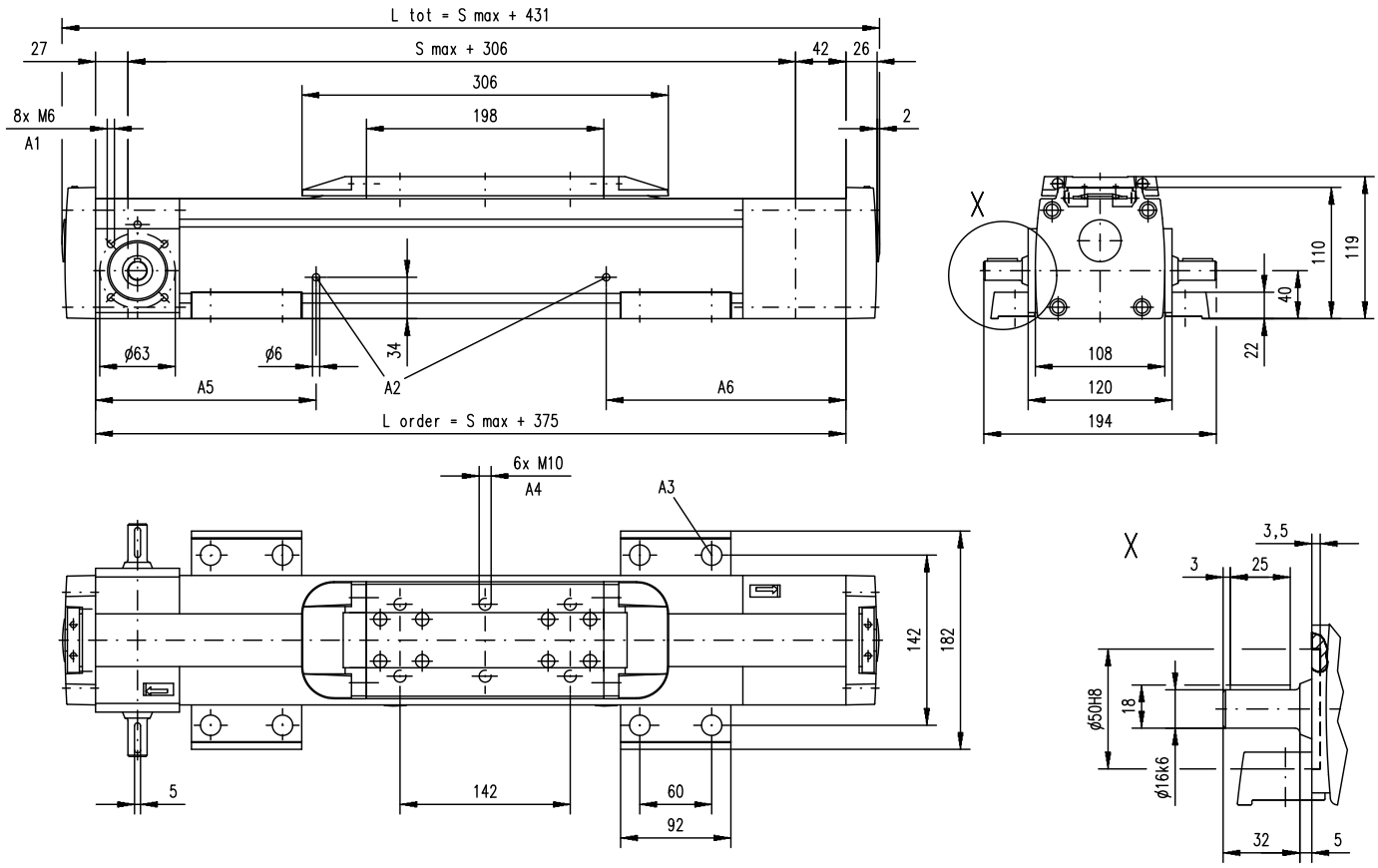

A1: Depth 9, Heli coil
A2: lubrication holes
A3: ø17/ø10,5 for socket head cap screw M10
A4: depth 10, Heli coil
A5: 170 (L order <= 1 m), 270 (L order > 1 m)
A6: 186 (L order < = 1 m), 436 (L order > 1 m)

Double Carriages

Parameter		M100
Minimum distance between carriages (Lc)	[mm]	350
Dynamic load (Fy), maximum	[N]	4508
Dynamic load (Fz), maximum	[N]	4508
Dynamic load torque (My), maximum	[Nm]	Lc[1] × 2,254
Dynamic load torque (Mz), maximum	[Nm]	Lc[1] × 2,254
Force required to move second carriage	[N]	45
Ordering lenght (L order)	[mm]	S max + Lc + 375
Total length (L tot]	[mm]	L order + 56
Weight of unit with zero stroke of carriages	[kg]	 17,40 4,80

[1] Value in mm

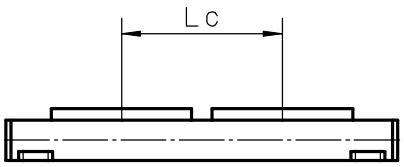

Linear Units with Belt Drive and Wheel Guide

SpeedLine, ForceLine

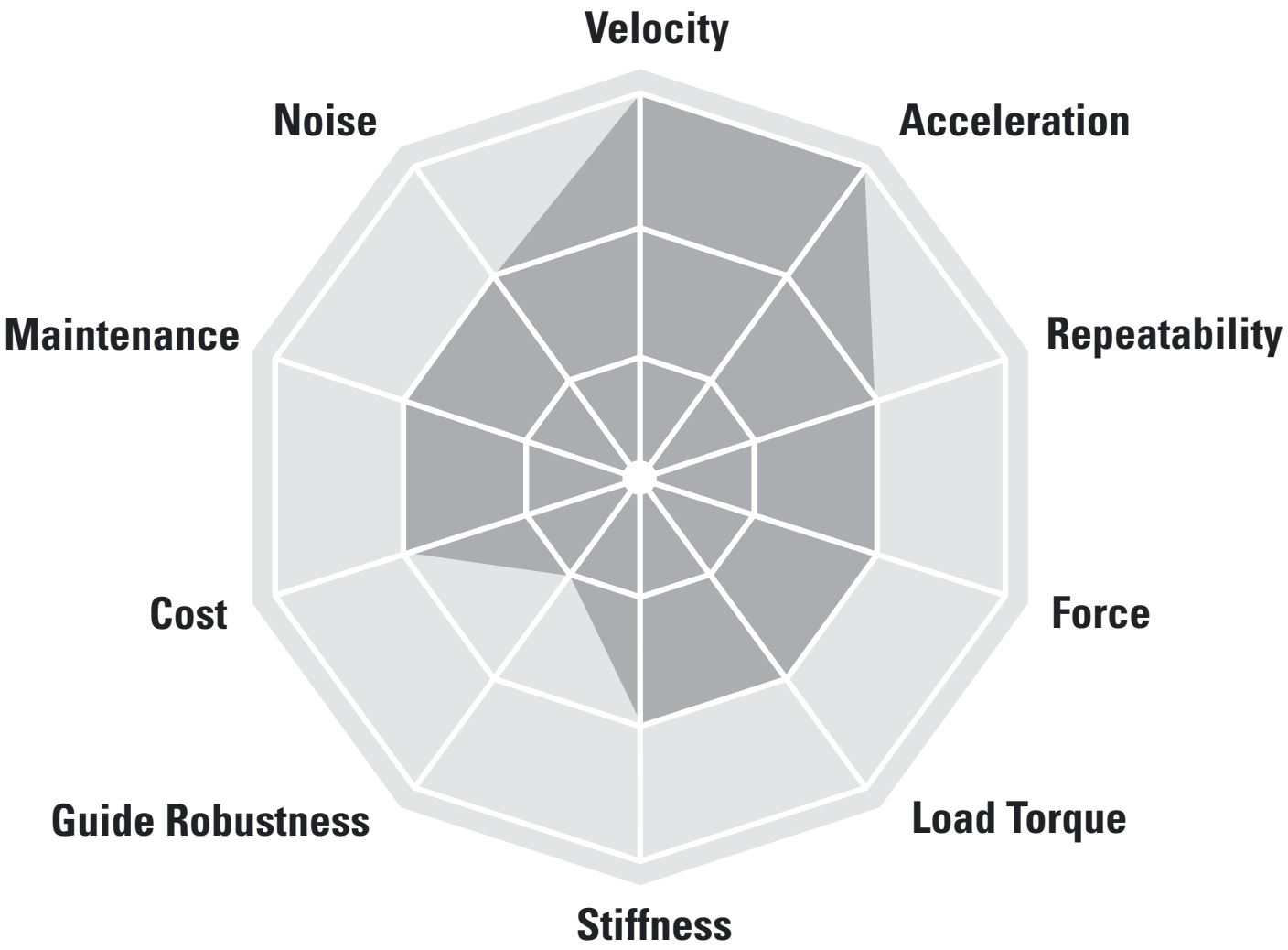

Typical Applications

Typical applications are where low to medium loads needs to be moved at high speed and acceleration. Typical examples are in packaging, cutting, pick and place and materials handling applications where the cycle times are critical.

SpeedLine WH

Features

- Can be installed in all directions
- Speed up to 11 m/s
- Acceleration up to 40 m/s²
- Stroke up to 11 m

Parameter		WH50	WH80	WH120
Profile size (width × height)	[mm]	50 × 50	80 × 80	120 × 110
Stroke length (S max), maximum	[mm]	3000	11000	11000
Linear speed, maximum	[m/s]	6,5	10,0	10,0
Dynamic carriage load (Fz), maximum	[N]	730	2100	9300
Remarks		external wheel guides no cover band	external wheel guides no cover band	external wheel guides no cover band
Page		92	94	96

ForceLine MLSH


MLSH60Z

Features

- Can be installed in all directions
- Patented plastic cover band
- Speed up to 10 m/s
- Low profile height

Parameter		MLSH60Z	MLSH80Z
Profile size (width × height)	[mm]	160 × 65	240 × 85
Stroke length (S max), maximum	[mm]	5500	5900
Linear speed, maximum	[m/s]	10,0	10,0
Dynamic carriage load (Fz), maximum	[N]	3000	5000
Remarks		internal wheel guides	internal wheel guides
Page		98	100

WH50

Belt Drive, Wheel Guide

» Ordering key - see page 204
» Accessories - see page 127
» Additional data - see page 185

General Specifications

Parameter	WH50
Profile size (w × h) [mm]	50 × 50
Type of belt	16ATL5
Carriage sealing system	none
Adjustable belt tensioning	the belt can be retensioned by the customer if necessary
Lubrication	lubrication og guiding surfaces
Included accessories	4 × mounting clamps

Performance Specifications

Parameter		WH50
Stroke length (S max), maximum	[mm]	3000
Linear speed, maximum	[m/s]	6,5
Acceleration, maximum	[m/s²]	40
Repeatability	[± mm]	0,05
Input speed, maximum	[rpm]	3250
Operation temperature limits	[°C]	0 – 80
Dynamic load (Fx), maximum	[N]	670[3]
Dynamic load (Fy), maximum	[N]	415[1] / 2820[2]
Dynamic load (Fz), maximum	[N]	730[1] / 5080[2]
Dynamic load torque (Mx), maximum	[Nm]	16[1] / 99[2]
Dynamic load torque (My), maximum	[Nm]	87[1] / 500[2]
Dynamic load torque (Mz), maximum	[Nm]	50[1] / 280[2]
Drive shaft force (Frd), maximum	[N]	150
Drive shaft torque (Mta), maximum	[Nm]	17
Pulley diameter	[mm]	38,2
Stroke per shaft revolution	[mm]	120
Weight	[kg]	
of unit with zero stroke		3,50
of every 100 mm of stroke		0,44
of each carriage		0,90

[1] Value for the complete unit
[2] Value for the wheel guide only
[3] See diagram Force Fx

Carriage Idle Torque, (M idle) [Nm]

Input speed [rpm]	Idle torque [Nm]
150	1,7
1500	2,4
3250	3,8

M idle = the input torque needed to move the carriage with no load on it.

Deflection of the Profile

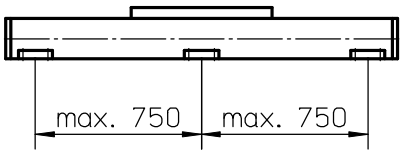

A mounting clamp must be installed at least at every 750 mm to be able to operate the maximum load. Less clamps may be required if less load is being operated, see the additional technical data for more information.

Force Fx as a Function of the Speed

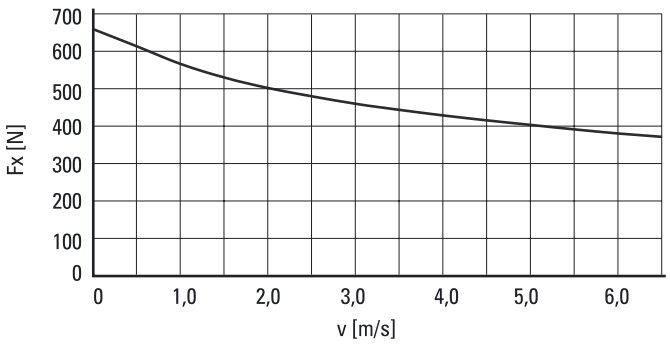

Definition of Forces

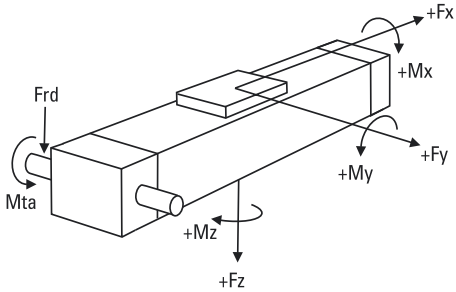

WH50

Belt Drive, Wheel Guide

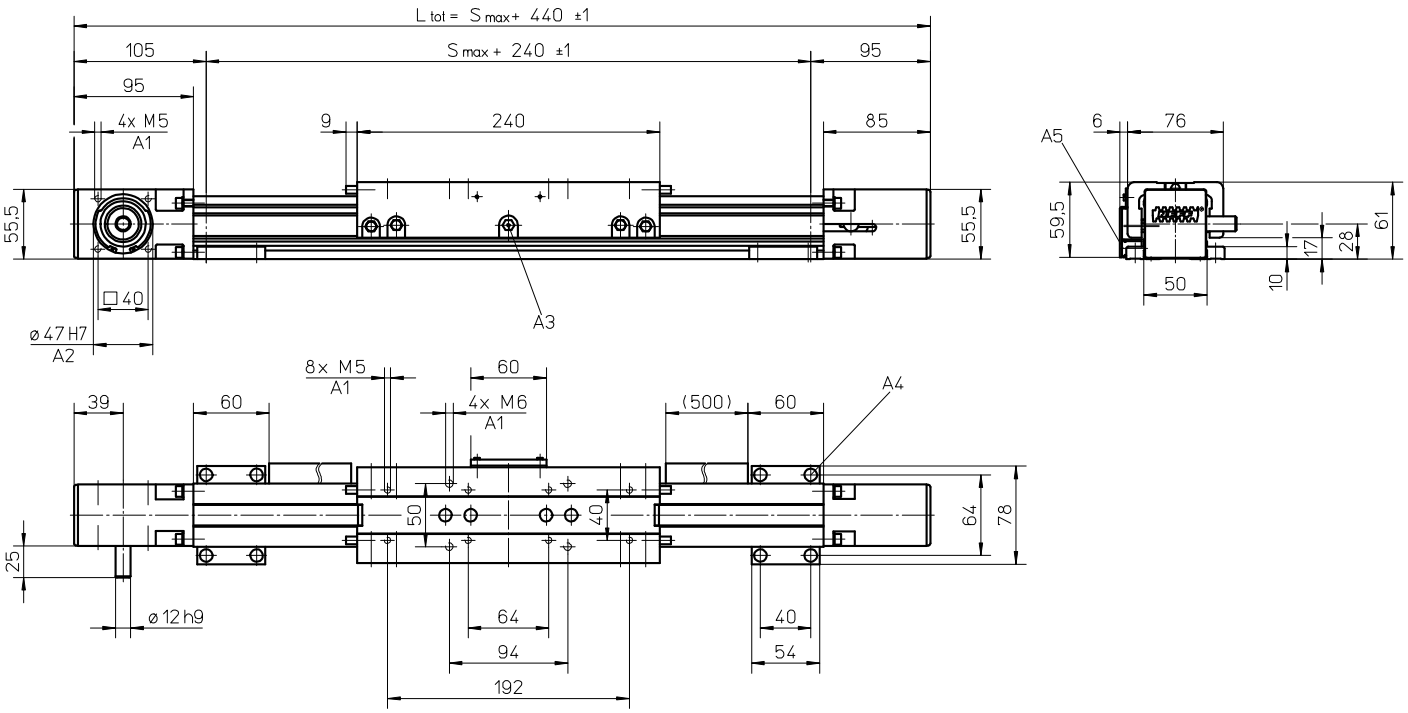

A1: depth 10
A2: depth 3
A3: funnel type lubricating nipple DIN3405-M6×1-D1
A4: socket cap screw ISO4762-M5×12 8.8
A5: ENF inductive sensor rail option kit (optional)

Long Carriage

Parameter		WH50
Carriage length	[mm]	400
Dynamic load torque (My), maximum	[Nm]	130
Dynamic load torque (Mz), maximum	[Nm]	75
Weight	[kg]	1,47

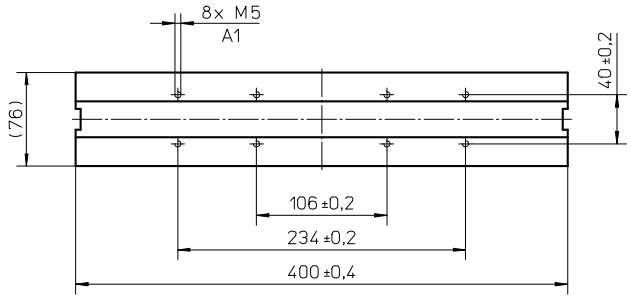

A1: depth 10

Double Carriages

Parameter		WH50
Minimum distance between carriages (L_A)	[mm]	260
Dynamic load (Fy), maximum	[N]	830
Dynamic load (Fz), maximum	[N]	1460
Dynamic load torque (My), maximum	[Nm]	L_A[1] × 0,415
Dynamic load torque (Mz), maximum	[Nm]	L_A[1] × 0,73
Force required to move second carriage	[N]	16
Total length (L tot)	[mm]	S max + 440 + L_A

[1] Value in mm

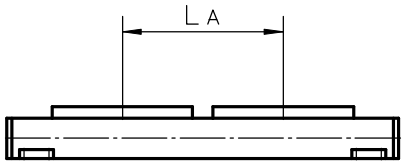

WH80

Belt Drive, Wheel Guide

» Ordering key - see page 204
» Accessories - see page 127
» Additional data - see page 185

General Specifications

Parameter	WH80
Profile size (w × h) [mm]	80 × 80
Type of belt	32ATL10
Carriage sealing system	none
Adjustable belt tensioning	the belt can be retensioned by the customer if necessary
Lubrication	lubrication og guiding surfaces
Included accessories	4 × mounting clamps

Performance Specifications

Parameter		WH80
Stroke length (S max), maximum	[mm]	11000
Linear speed, maximum	[m/s]	10,0
Acceleration, maximum	[m/s²]	40
Repeatability	[± mm]	0,05
Input speed, maximum	[rpm]	3000
Operation temperature limits	[°C]	0 – 80
Dynamic load (Fx), maximum	[N]	2700[3]
Dynamic load (Fy), maximum	[N]	882[1] / 8150[2]
Dynamic load (Fz), maximum	[N]	2100[1] / 14680[2]
Dynamic load torque (Mx), maximum	[Nm]	75[1] / 480[2]
Dynamic load torque (My), maximum	[Nm]	230[1] / 1610[2]
Dynamic load torque (Mz), maximum	[Nm]	100[1] / 900[2]
Drive shaft force (Frd), maximum	[N]	500
Drive shaft torque (Mta), maximum	[Nm]	100
Pulley diameter	[mm]	63,66
Stroke per shaft revolution	[mm]	200
Weight	[kg]	
of unit with zero stroke		8,63
of every 100 mm of stroke		0,93
of each carriage		2,75

[1] Value for the complete unit
[2] Value for the wheel guide only
[3] See diagram Force Fx

Carriage Idle Torque, (M idle) [Nm]

Input speed [rpm]	Idle torque [Nm]
150	2,4
1500	3,5
3000	5,0

M idle = the input torque needed to move the carriage with no load on it.

Deflection of the Profile

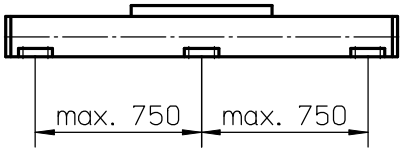

A mounting clamp must be installed at least at every 750 mm to be able to operate the maximum load. Less clamps may be required if less load is being operated, see the additional technical data for more information. Units with a profile length over 6300 mm consists of two profiles where the joint between the two profiles must be addequately supported on both sides.

Force Fx as a Function of the Speed

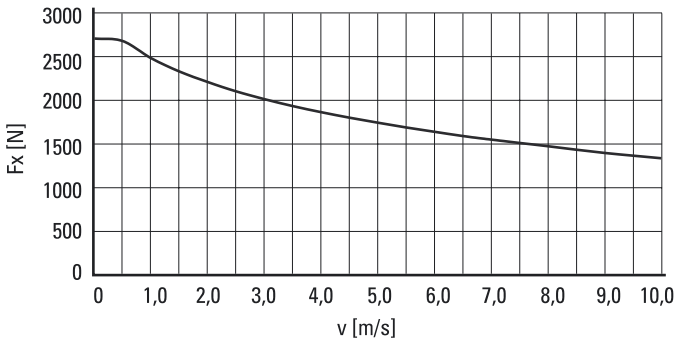

Definition of Forces

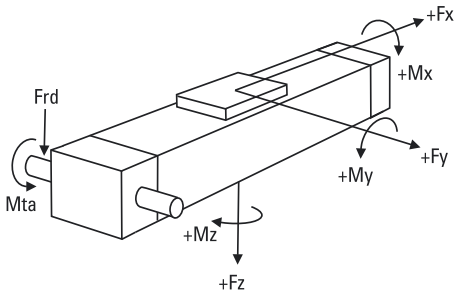

WH80

Belt Drive, Wheel Guide

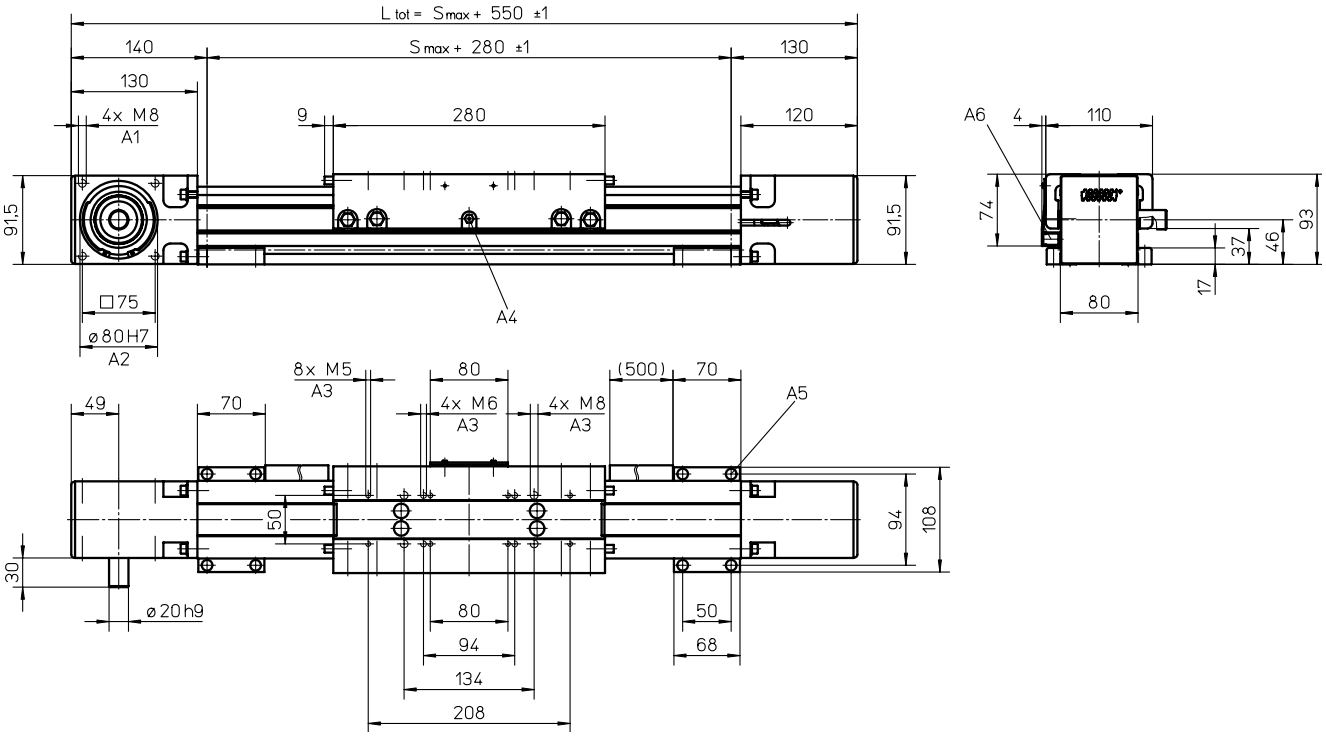

A1: depth 16
A2: depth 2,5
A3: depth 12

A4: funnel type lubricating nipple DIN3405-M6×1-D1
A5: socket cap screw ISO4762-M6×20 8.8
A6: ENF inductive sensor rail option kit (optional)

Long Carriage

Parameter		WH80
Carriage length	[mm]	450
Dynamic load torque (My), maximum	[Nm]	345
Dynamic load torque (Mz), maximum	[Nm]	150
Weight	[kg]	3,43

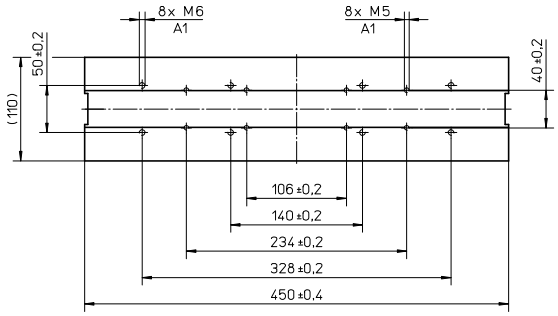

A1: depth 12

Double Carriages

Parameter		WH80
Minimum distance between carriages (L_A)	[mm]	300
Dynamic load (Fy), maximum	[N]	1764
Dynamic load (Fz), maximum	[N]	4200
Dynamic load torque (My), maximum	[Nm]	L_A[1] × 0,882
Dynamic load torque (Mz), maximum	[Nm]	L_A[1] × 2,1
Force required to move second carriage	[N]	20
Total length (L tot)	[mm]	S max + 550 + L_A

[1] Value in mm

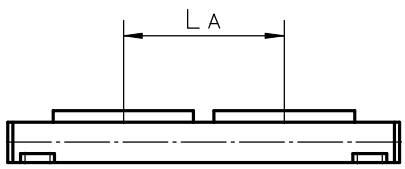

WH120

Belt Drive, Wheel Guide

» Ordering key - see page 204
» Accessories - see page 127
» Additional data - see page 185

General Specifications

Parameter	WH120
Profile size (w × h) [mm]	120 × 110
Type of belt	50ATL10
Carriage sealing system	none
Adjustable belt tensioning	the belt can be retensioned by the customer if necessary
Lubrication	lubrication og guiding surfaces
Included accessories	4 × mounting clamps

Performance Specifications

Parameter		WH120
Stroke length (S max), maximum	[mm]	11000
Linear speed, maximum	[m/s]	10,0
Acceleration, maximum	[m/s²]	40
Repeatability	[± mm]	0,05
Input speed, maximum	[rpm]	2308
Operation temperature limits	[°C]	0 – 80
Dynamic load (Fx), maximum	[N]	5000[3]
Dynamic load (Fy), maximum	[N]	4980[1] / 40500[2]
Dynamic load (Fz), maximum	[N]	9300[1] / 64800[2]
Dynamic load torque (Mx), maximum	[Nm]	500[1] / 3140[2]
Dynamic load torque (My), maximum	[Nm]	930[1] / 5830[2]
Dynamic load torque (Mz), maximum	[Nm]	500[1] / 3640[2]
Drive shaft force (Frd), maximum	[N]	700
Drive shaft torque (Mta), maximum	[Nm]	200
Pulley diameter	[mm]	82,76
Stroke per shaft revolution	[mm]	260
Weight	[kg]	
of unit with zero stroke		17,00
of every 100 mm of stroke		1,64
of each carriage		5,50

[1] Value for the complete unit
[2] Value for the wheel guide only
[3] See diagram Force Fx

Carriage Idle Torque, (M idle) [Nm]

Input speed [rpm]	Idle torque [Nm]
150	4,8
1500	7,0
2308	10,0

M idle = the input torque needed to move the carriage with no load on it.

Deflection of the Profile

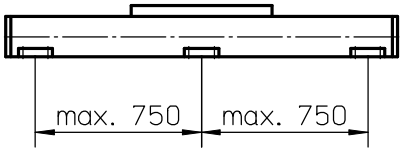

A mounting clamp must be installed at least at every 750 mm to be able to operate the maximum load. Less clamps may be required if less load is being operated, see the additional technical data for more information. Units with a profile length over 4900 mm consists of two profiles where the joint between the two profiles must be addequately supported on both sides.

Force Fx as a Function of the Speed

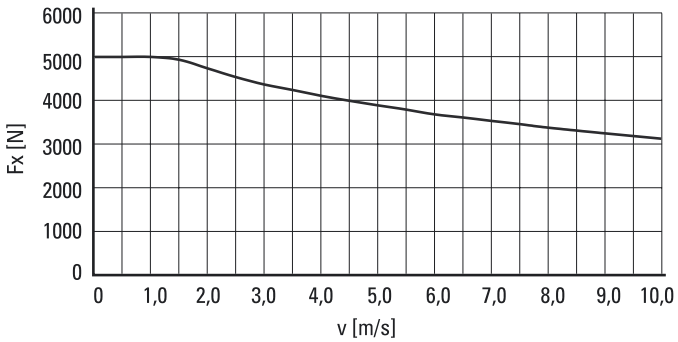

Definition of Forces

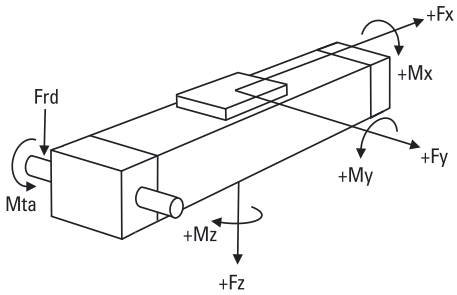

WH120

Belt Drive, Wheel Guide

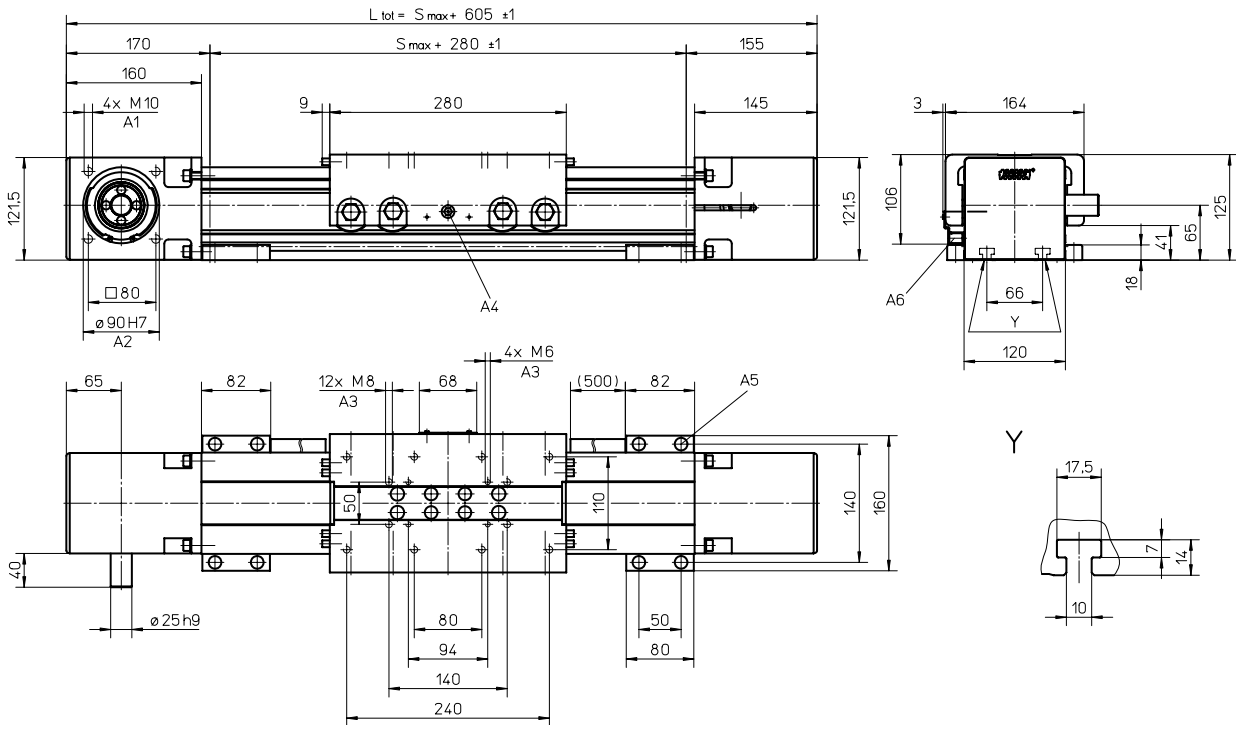

A1: depth 20
A2: depth 7
A3: depth 12

A4: funnel type lubricating nipple DIN3405-M6×1-D1
A5: socket cap screw ISO4762-M8×20 8.8
A6: ENF inductive sensor rail option kit (optional)

Long Carriage

Parameter		WH120
Carriage length	[mm]	520
Dynamic load torque (My), maximum	[Nm]	1395
Dynamic load torque (Mz), maximum	[Nm]	750
Weight	[kg]	8,67

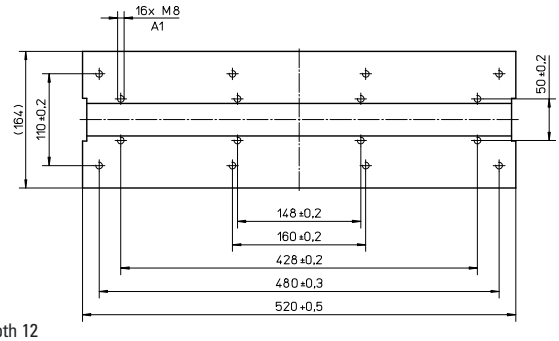

A1: depth 12

Double Carriages

Parameter		WH120
Minimum distance between carriages (L_A)	[mm]	300
Dynamic load (Fy), maximum	[N]	9960
Dynamic load (Fz), maximum	[N]	18600
Dynamic load torque (My), maximum	[Nm]	L_A[1] × 4,98
Dynamic load torque (Mz), maximum	[Nm]	L_A[1] × 9,3
Force required to move second carriage	[N]	30
Total length (L tot)	[mm]	S max + 605 + L_A

[1] Value in mm

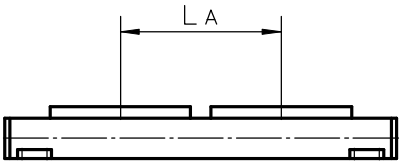

MLSH60Z

Belt Drive, Wheel Guide

» Ordering key - see page 205
» Accessories - see page 127
» Additional data - see page 185

General Specifications

Parameter	MLSH60Z
Profile size (w × h) [mm]	160 × 65
Type of belt	32ATL5
Carriage sealing system	plastic cover band
Adjustable belt tensioning	the belt can be retensioned by the customer if necessary
Lubrication	no lubrication required
Included accessories	4 × mounting clamps

Performance Specifications

Parameter		MLSH60Z
Stroke length (S max), maximum	[mm]	5500
Linear speed, maximum	[m/s]	6,5
Acceleration, maximum	[m/s²]	40
Repeatability	[± mm]	0,05
Input speed, maximum	[rpm]	3000
Operation temperature limits	[°C]	0 – 80
Dynamic load (Fx), maximum	[N]	1480[3]
Dynamic load (Fy), maximum	[N]	3000[1] / 24760[2]
Dynamic load (Fz), maximum	[N]	3000[1] / 24760[2]
Dynamic load torque (Mx), maximum	[Nm]	165[1] / 1920[2]
Dynamic load torque (My), maximum	[Nm]	310[1] / 2600[2]
Dynamic load torque (Mz), maximum	[Nm]	310[1] / 2600[2]
Drive shaft force (Frd), maximum	[N]	200
Drive shaft torque (Mta), maximum	[Nm]	45
Pulley diameter	[mm]	42,97
Stroke per shaft revolution	[mm]	135
Weight	[kg]	
of unit with zero stroke		12,60
of every 100 mm of stroke		1,33
of each carriage		3,90

[1] Value for the complete unit
[2] Value for the wheel guide only
[3] See diagram Force Fx

Carriage Idle Torque, (M idle) [Nm]

Input speed [rpm]	Idle torque [Nm]
150	4,6
1500	9,0
3000	12,0

M idle = the input torque needed to move the carriage with no load on it.

Deflection of the Profile

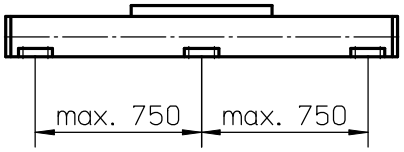

A mounting clamp must be installed at least at every 750 mm to be able to operate the maximum load. Less clamps may be required if less load is being operated, see the additional technical data for more information.

Force Fx as a Function of the Speed

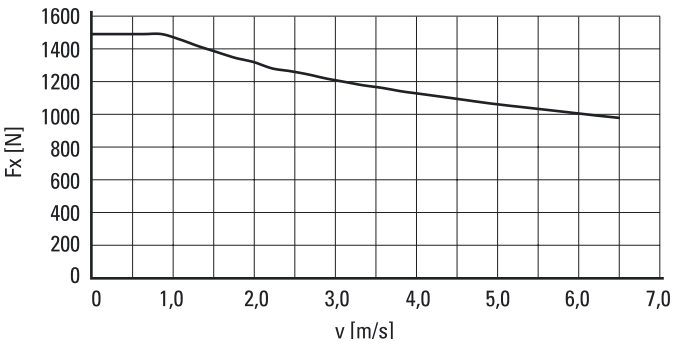

Definition of Forces

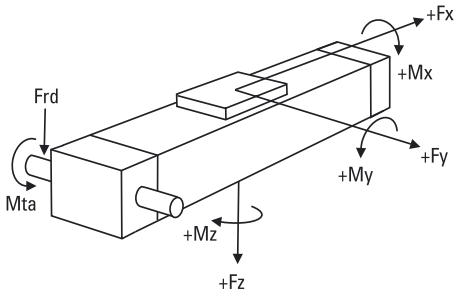

MLSH60Z

Belt Drive, Wheel Guide

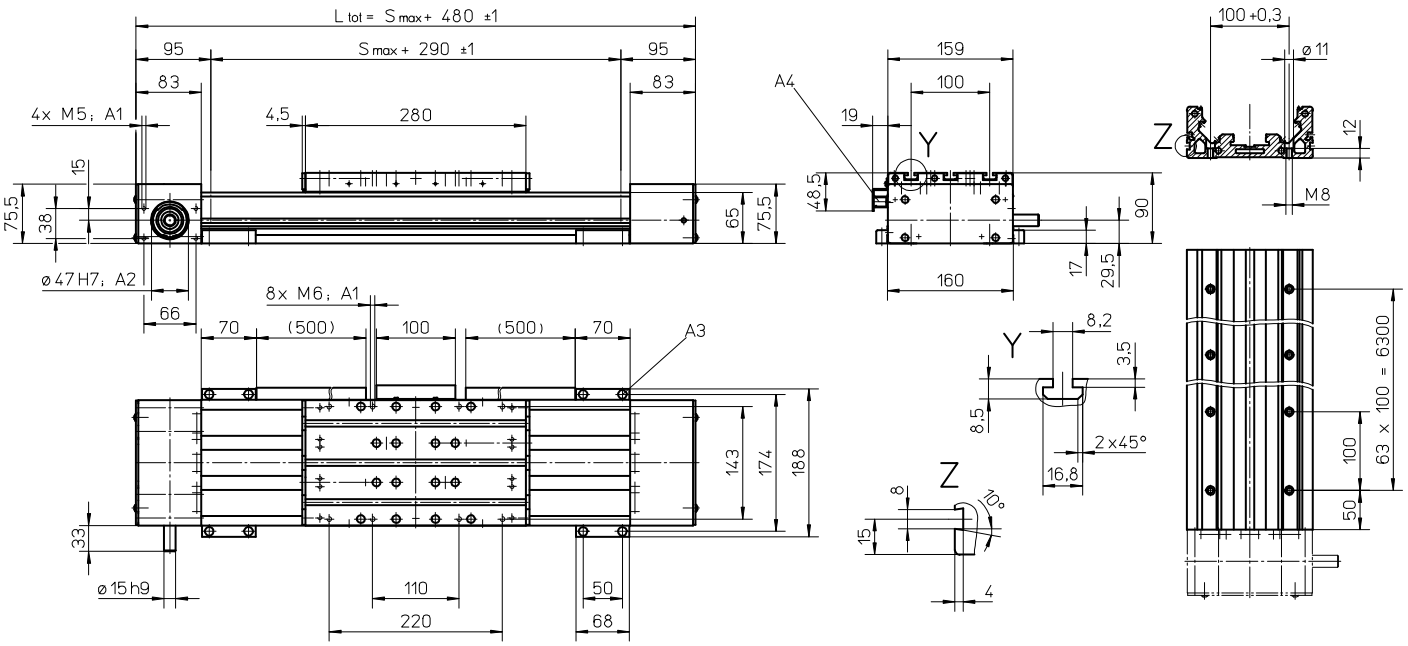

A1: depth 10
A2: depth 4

A3: socket cap screw ISO4762-M6x20 8.8
A4: ENF inductive sensor rail option kit (optional)

Long Carriage

Parameter		MLSH60Z
Carriage length	[mm]	450
Dynamic load torque (My), maximum	[Nm]	585
Dynamic load torque (Mz), maximum	[Nm]	585
Weight	[kg]	6

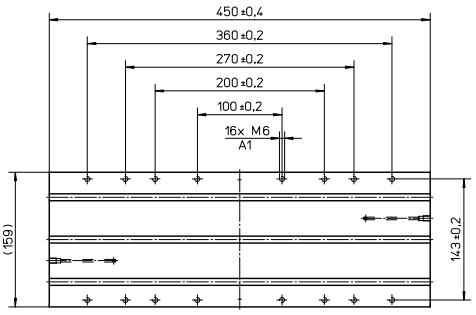

A1: depth 10

Double Carriages

Parameter		MLSH60Z
Minimum distance between carriages (L_A)	[mm]	290
Dynamic load (Fy), maximum	[N]	6000
Dynamic load (Fz), maximum	[N]	6000
Dynamic load torque (My), maximum	[Nm]	L_A[1] × 3
Dynamic load torque (Mz), maximum	[Nm]	L_A[1] × 3
Force required to move second carriage	[N]	100
Total length (L tot)	[mm]	S max + 480 + L_A

[1] Value in mm

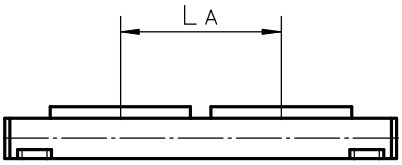

MLSH80Z

Belt Drive, Wheel Guide

» Ordering key - see page 205
» Accessories - see page 127
» Additional data - see page 185

General Specifications

Parameter	MLSH80Z
Profile size (w × h) [mm]	240 × 85
Type of belt	75ATL10
Carriage sealing system	plastic cover band
Adjustable belt tensioning	the belt can be retensioned by the customer if necessary
Lubrication	no lubrication required
Included accessories	4 × mounting clamps

Performance Specifications

Parameter		MLSH80Z
Stroke length (S max), maximum	[mm]	5900
Linear speed, maximum	[m/s]	10,0
Acceleration, maximum	[m/s²]	40
Repeatability	[± mm]	0,05
Input speed, maximum	[rpm]	3000
Operation temperature limits	[°C]	0 – 80
Dynamic load (Fx), maximum	[N]	5000[3]
Dynamic load (Fy), maximum	[N]	5000[1] / 55090[2]
Dynamic load (Fz), maximum	[N]	5000[1] / 55090[2]
Dynamic load torque (Mx), maximum	[Nm]	350[1] / 2890[2]
Dynamic load torque (My), maximum	[Nm]	450[1] / 4490[2]
Dynamic load torque (Mz), maximum	[Nm]	450[1] / 4490[2]
Drive shaft force (Frd), maximum	[N]	700
Drive shaft torque (Mta), maximum	[Nm]	150
Pulley diameter	[mm]	63,66
Stroke per shaft revolution	[mm]	200
Weight	[kg]	
of unit with zero stroke		30,7
of every 100 mm of stroke		2,4
of each carriage		10,0

[1] Value for the complete unit
[2] Value for the wheel guide only
[3] See diagram Force Fx

Carriage Idle Torque, (M idle) [Nm]

Input speed [rpm]	Idle torque [Nm]
150	8,5
1500	12,5
3000	15,5

M idle = the input torque needed to move the carriage with no load on it.

Deflection of the Profile

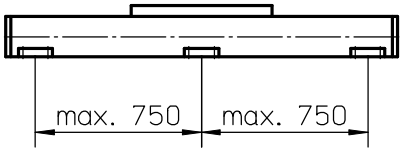

A mounting clamp must be installed at least at every 750 mm to be able to operate the maximum load. Less clamps may be required if less load is being operated, see the additional technical data for more information.

Force Fx as a Function of the Speed

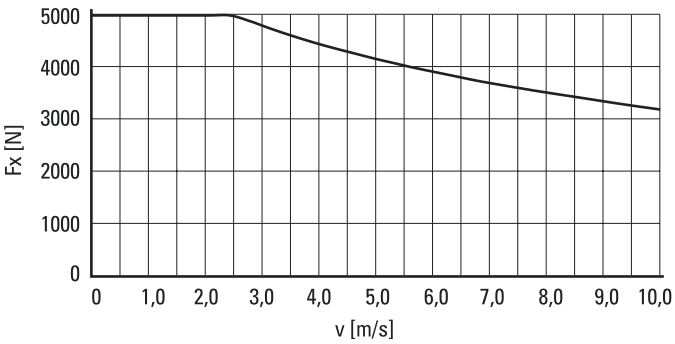

Definition of Forces

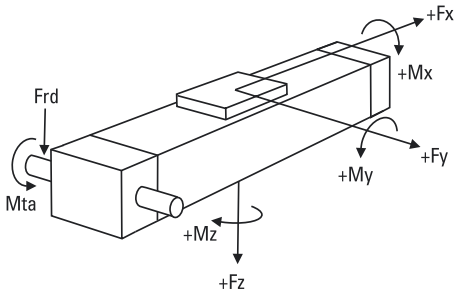

MLSH80Z

Belt Drive, Wheel Guide

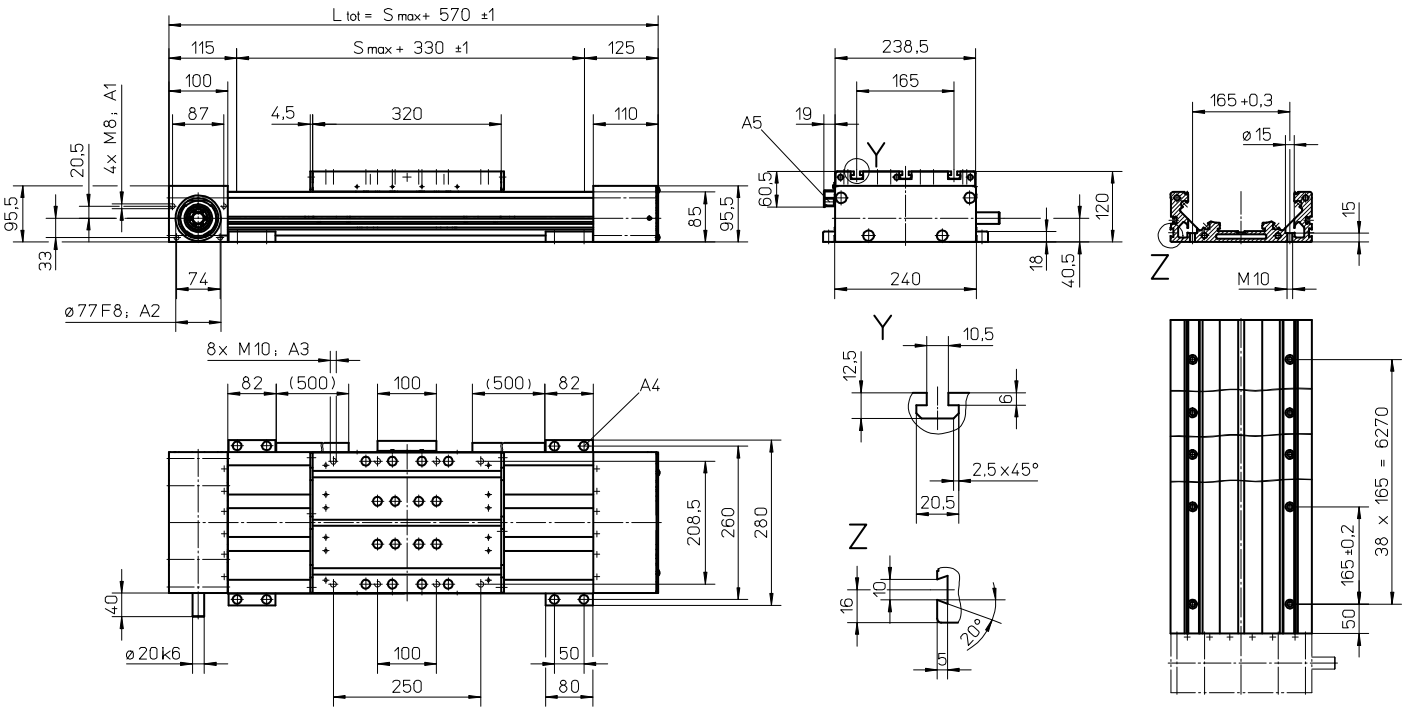

A1: depth 18
A2: depth 4
A3: depth 15

A4: socket cap screw ISO4762-M8×20 8.8
A5: ENF inductive sensor rail option kit (optional)

Long Carriage

Parameter		MLSH80Z
Carriage length	[mm]	500
Dynamic load torque (My), maximum	[Nm]	700
Dynamic load torque (Mz), maximum	[Nm]	700
Weight	[kg]	14,1

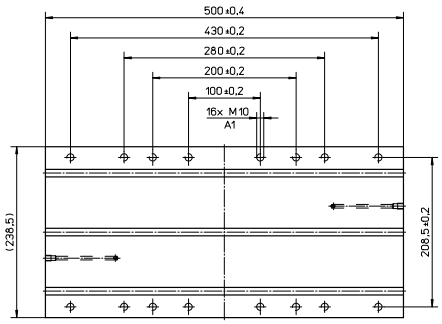

A1: depth 15

Double Carriages

Parameter		MLSH80Z
Minimum distance between carriages (L_A)	[mm]	340
Dynamic load (Fy), maximum	[N]	10000
Dynamic load (Fz), maximum	[N]	10000
Dynamic load torque (My), maximum	[Nm]	L_A[1] × 5
Dynamic load torque (Mz), maximum	[Nm]	L_A[1] × 5
Force required to move second carriage	[N]	200
Total length (L tot)	[mm]	S max + 570 + L_A

[1] Value in mm

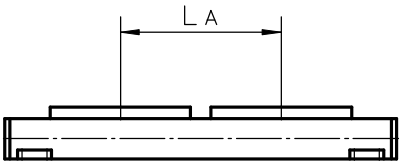

Linear Lifting Units

SpeedLine, Movo Z

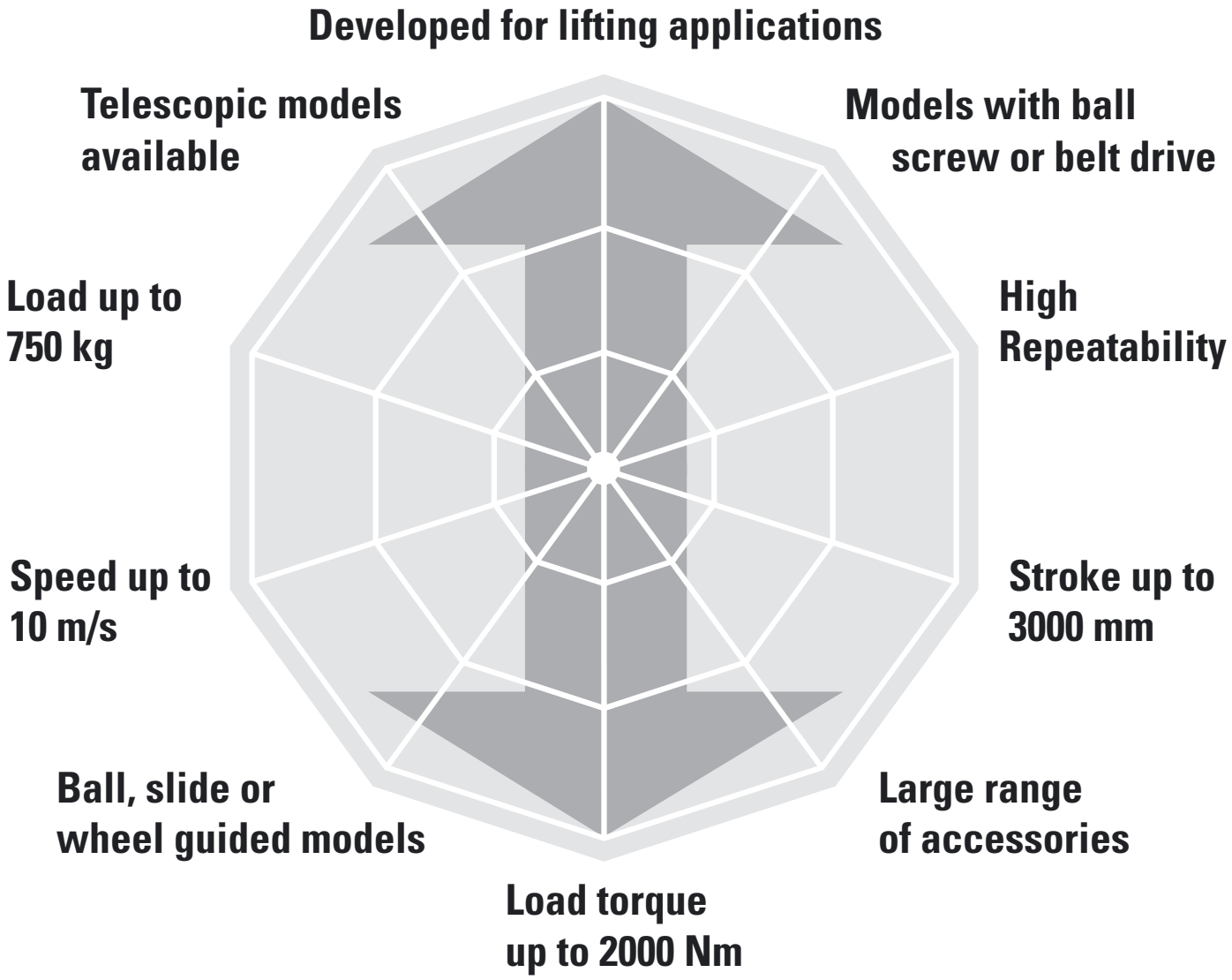

Typical Applications

Typical applications are found in most industries where light, medium or heavy loads needs to be lifted. Examples are pick and place operations, materials handling, electronic assembly and for lifting equipment in automotive assembly lines.

SpeedLine WHZ


WHZ50

Features

- Can be installed in all directions
- Belt drive
- External wheel guides
- Speed up to 10 m/s
- Acceleration up to 40 m/s²

Parameter		WHZ50	WHZ80
Profile size (width × lenght)	[mm]	50 × 50	80 × 80
Stroke length (S max), maximum	[mm]	1500	3000
Linear speed, maximum	[m/s]	6,5	10,0
Dynamic load (Fx), maximum	[N]	670	1480
Remarks		the load is always attached to the end of the lifting profile	the load is always attached to the end of the lifting profile
Page		106	108

Movo Z


Z2

Features

- Telescopic movement
- Ball screw drive
- Internal slide guides
- Load up to 7500 N
- Load torque up to 2000 Nm
- Two end stop limit switches (Z2 only)

Parameter		Z2	Z3
Profile size (width × height)	[mm]	188 × 150	188 × 150
Stroke length (S max), maximum	[mm]	1500	1500
Linear speed, maximum	[m/s]	1,25	1,25
Dynamic load (Fz), maximum	[N]	7500	7500
Remarks		Can be installed in any direction. The load must be attached at the end of the lifting profile	Can only be installed vertically. The load must be attached at the end of the lifting profile.
Page		110	112

Movo ZB

Features

- Can be installed in all directions
- Belt drive
- Internal ball guides
- Stroke up to 2,5 m

Parameter		ZB
Profile size (width × height)	[mm]	88 × 88
Stroke length (S max), maximum	[mm]	2500
Linear speed, maximum	[m/s]	3,0
Dynamic load (Fz), maximum	[N]	500
Remarks		the load is always attached to the end of the lifting profile
Page		114

WHZ50

Belt Drive, Wheel Guide

» Ordering key - see page 206
» Accessories - see page 127
» Additional data - see page 186

General Specifications

Parameter	WHZ50
Profile size (w × h) [mm]	50 × 50
Type of belt	16 ATL 5
Carriage sealing system	none
Adjustable belt tensioning	the belt can be retensioned by the customer if necessary
Lubrication	lubrication of carriage and guide surfaces
Included accessories	-

Performance Specifications

Parameter		WHZ50
Stroke length (S max), maximum	[mm]	1500
Linear speed, maximum	[m/s]	6,5
Acceleration, maximum	[m/s²]	40
Repeatability	[± mm]	0,05
Input speed, maximum	[rpm]	3250
Operation temperature limits	[°C]	0 – 80
Dynamic load (Fx), maximum	[N]	670[3]
Dynamic load (Fy), maximum	[N]	415[1] / 2820[2]
Dynamic load (Fz), maximum	[N]	730[1] / 5080[2]
Dynamic load torque (Mx), maximum	[Nm]	16[1] / 100[2]
Dynamic load torque (My), maximum	[Nm]	87[1] / 500[2]
Dynamic load torque (Mz), maximum	[Nm]	50[1] / 280[2]
Drive shaft force (Frd), maximum	[N]	150
Drive shaft torque (Mta), maximum	[Nm]	17
Pulley diameter	[mm]	38,2
Stroke per shaft revolution	[mm]	120
Weight	[kg]	
of unit with zero stroke		4,50
of every 100 mm of stroke		0,42
of each drive station box		2,90

[1] Value for the complete unit
[2] Value for the wheel guide only
[3] See diagram Force Fx

Carriage Idle Torque, (M idle) [Nm]

Input speed [rpm]	Idle torque [Nm]
150	1,7
1500	2,4
3250	3,8

M idle = the input torque needed to move the carriage with no load on it.

Force Fx as a Function of the Speed

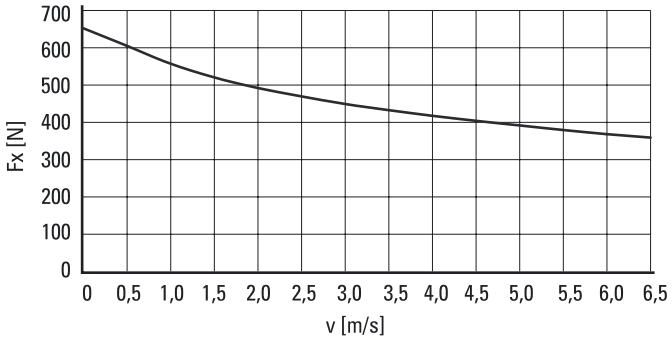

Definition of Forces

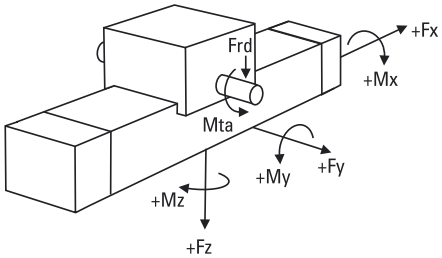

WHZ50

Belt Drive, Wheel Guide

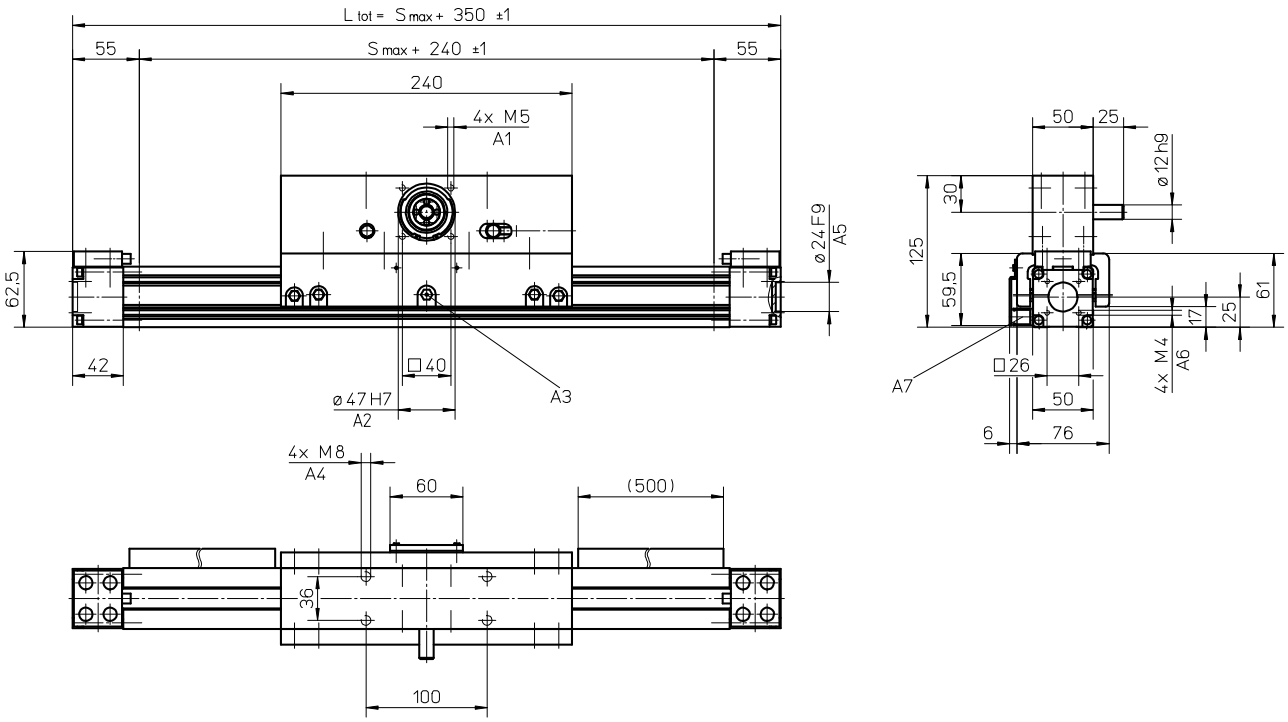

A1: depth 12
A2: depth 3,5
A3: funnel type lubricating nipple DIN3405-M6×1-D1
A4: depth 16
A5: depth 4
A6: depth 8
A7: ENF inductive sensor rail option kit (optional)

Long Carriage

Parameter		WHZ50
Carriage length	[mm]	400
Dynamic load torque (My), maximum	[Nm]	130
Dynamic load torque (Mz), maximum	[Nm]	75
Weight	[kg]	3,3

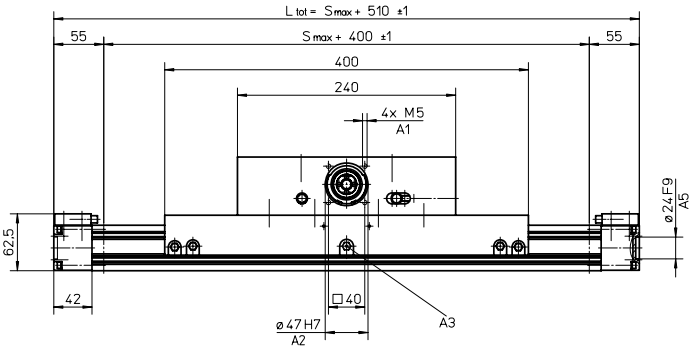

A1: depth 12
A2: depth 3,5
A3: funnel type lubricating nipple DIN3405-M6×1-D1
A5: depth 4

Double Carriages[2]

Parameter		WHZ50
Minimum distance between carriages (L_A)	[mm]	260
Dynamic load (Fy), maximum	[N]	830
Dynamic load (Fz), maximum	[N]	1460
Dynamic load torque (My), maximum	[Nm]	L_A[1] × 0,415
Dynamic load torque (Mz), maximum	[Nm]	L_A[1] × 0,73
Force required to move second carriage	[N]	16
Total length (L tot)	[mm]	S max + 350 + L_A

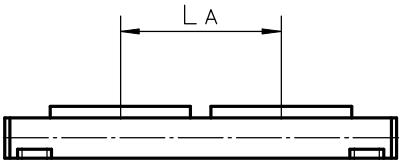

[1] Value in mm
[2] Second carriage is always a long carriage

WHZ80

Belt Drive, Wheel Guide

» Ordering key - see page 206
» Accessories - see page 127
» Additional data - see page 186

General Specifications

Parameter	WHZ80
Profile size (w × h) [mm]	80 × 80
Type of belt	32 ATL 5
Carriage sealing system	none
Adjustable belt tensioning	the belt can be retensioned by the customer if necessary
Lubrication	lubrication of carriage and guide surfaces
Included accessories	-

Performance Specifications

Parameter		WHZ80
Stroke length (S max), maximum	[mm]	3000
Linear speed, maximum	[m/s]	10,0
Acceleration, maximum	[m/s²]	40
Repeatability	[± mm]	0,05
Input speed, maximum	[rpm]	3000
Operation temperature limits	[°C]	0 – 80
Dynamic load (Fx), maximum	[N]	1480[3]
Dynamic load (Fy), maximum	[N]	882[1] / 8160[2]
Dynamic load (Fz), maximum	[N]	2100[1] / 14680[2]
Dynamic load torque (Mx), maximum	[Nm]	75[1] / 480[2]
Dynamic load torque (My), maximum	[Nm]	230[1] / 1610[2]
Dynamic load torque (Mz), maximum	[Nm]	100[1] / 900[2]
Drive shaft force (Frd), maximum	[N]	500
Drive shaft torque (Mta), maximum	[Nm]	50
Pulley diameter	[mm]	63,66
Stroke per shaft revolution	[mm]	200
Weight	[kg]	
of unit with zero stroke		11,20
of every 100 mm of stroke		0,91
of each drive station box		6,65

[1] Value for the complete unit
[2] Value for the wheel guide only
[3] See diagram Force Fx

Carriage Idle Torque, (M idle) [Nm]

Input speed [rpm]	Idle torque [Nm]
150	2,4
1500	3,5
3000	5,0

M idle = the input torque needed to move the carriage with no load on it.

Force Fx as a Function of the Speed

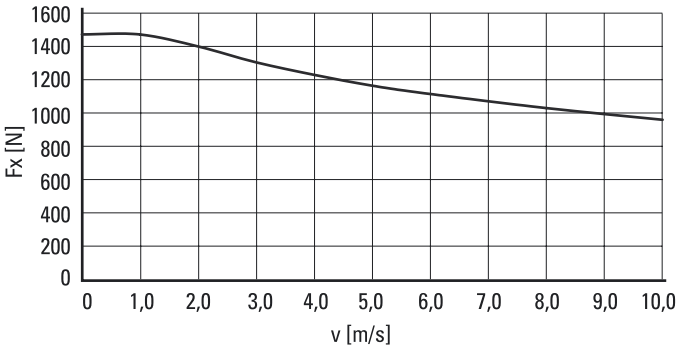

Definition of Forces

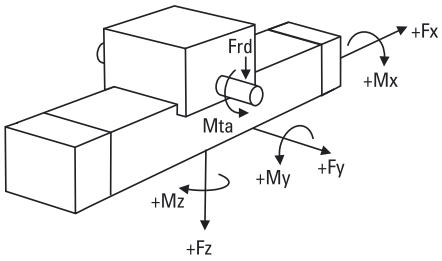

WHZ80

Belt Drive, Wheel Guide

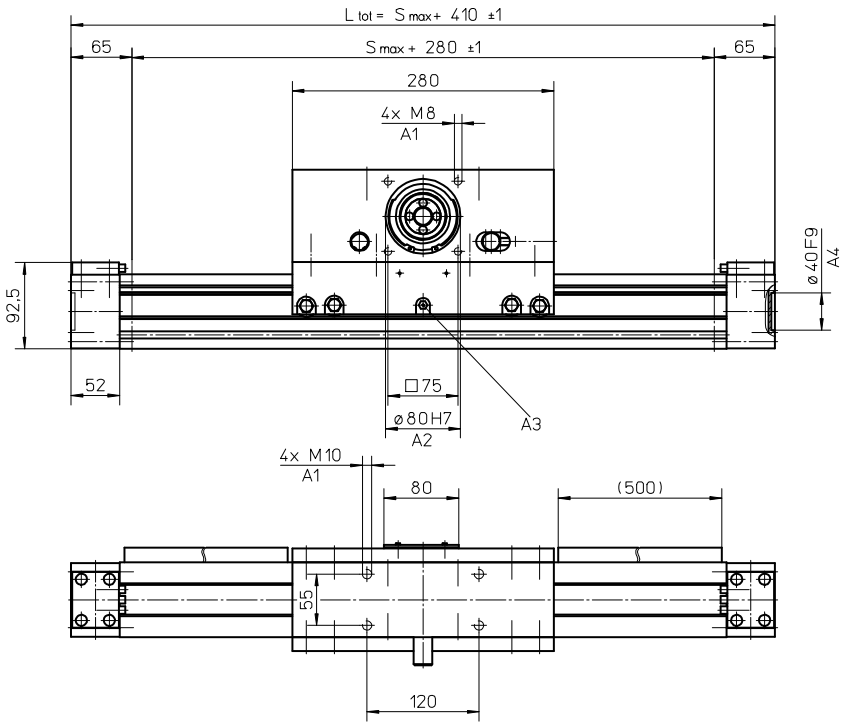

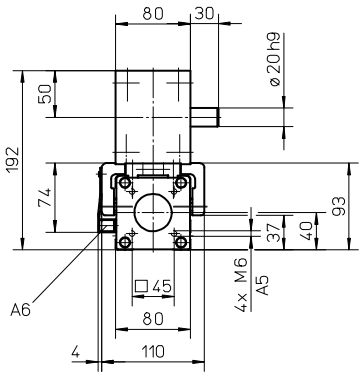

A1: depth 20
A2: depth 3,5
A3: funnel type lubricating nipple DIN3405-M6×1-D1
A4: depth 4
A5: depth 15
A6: ENF inductive sensor rail option kit (optional)

Long Carriage

Parameter		WHZ80
Carriage length	[mm]	450
Dynamic load torque (My), maximum	[Nm]	345
Dynamic load torque (Mz), maximum	[Nm]	150
Weight	[kg]	7,4

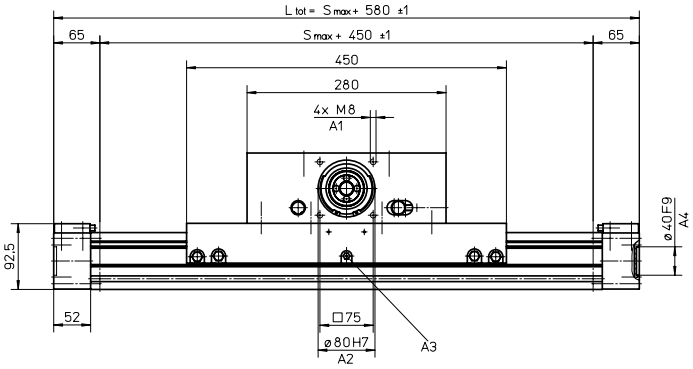

A1: depth 20
A2: depth 3,5
A3: funnel type lubricating nipple DIN3405-M6×1-D1
A4: depth 4

Double Carriages[2]

Parameter		WHZ80
Minimum distance between carriages (L_A)	[mm]	300
Dynamic load (Fy), maximum	[N]	1764
Dynamic load (Fz), maximum	[N]	4200
Dynamic load torque (My), maximum	[Nm]	L_A[1] × 0,882
Dynamic load torque (Mz), maximum	[Nm]	L_A[1] × 2,1
Force required to move second carriage	[N]	20
Total length (L tot)	[mm]	S max + 410 + L_A

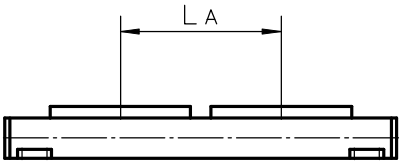

[1] Value in mm
[2] Second carriage is always a long carriage

Z2

Ball Screw Drive, Slide Guide

» Ordering key - see page 206
» Accessories - see page 127
» Additional data - see page 186

General Specifications

Parameter	Z2
Profile size (w × h) [mm]	188 × 150
Type of screw	ball screw with single nut
Sealing system	none
Screw supports	none
Lubrication	lubrication of screw and slide surfaces
Included accessories	none

Performance Specifications

Parameter		Z2
Stroke length (S max), maximum	[mm]	1500
Linear speed, maximum	[m/s]	1,25
Acceleration, maximum	[m/s²]	8
Repeatability	[± mm]	0,1
Input speed, maximum screw diameter/lead [mm] 25/10, 25/25 screw diameter/lead [mm] 32/20	[rpm]	 3000 2500
Operation temperature limits	[°C]	-20 – 70
Dynamic load (Fz), maximum screw diameter/lead [mm] 25/10, 25/25 screw diameter/lead [mm] 32/20	[N]	 5000 7500
Dynamic load torque (Mx), maximum	[Nm]	700[1]
Dynamic load torque (My), maximum	[Nm]	700[1]
Dynamic load torque (Mz), maximum	[Nm]	330[1]
Drive shaft force (Frd), maximum screw diameter/lead [mm] 25/10, 25/25 screw diameter/lead [mm] 32/20	[N]	 1000 1200
Drive shaft torque (Mta), maximum screw diameter/lead [mm] 25/10, 25/25 screw diameter/lead [mm] 32/20	[Nm]	 45 93
Screw versions, diameter (d0) / lead (p)	[mm]	25/10, 25/25, 32/20
Weight of unit with zero stroke, ball screw ø 25 mm of unit with zero stroke, ball screw ø 32 mm of every 100 mm of stroke, ball screw ø 25 mm of every 100 mm of stroke, ball screw ø 32 mm	[kg]	 19,00 23,64 2,50 2,80

[1] Value for the complete uniy

Idle Torque (M idle) [Nm]

Input speed [rpm]	Screw diameter/lead [mm]		
	d0 = 25 / p = 10	d0 = 25 / p = 25	d0 = 32 / p = 20
500	0,7	1,9	1,5

M idle = the input torque needed to move the lifting profiles without any load.

Critical Speed

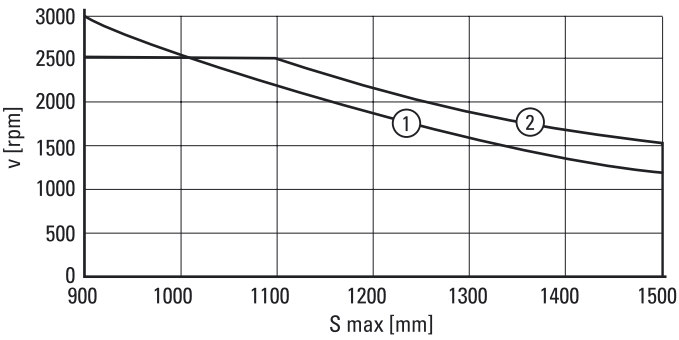

1: screw diameter 25 mm
2: screw diameter 32 mm

Definition of Forces and Stroke

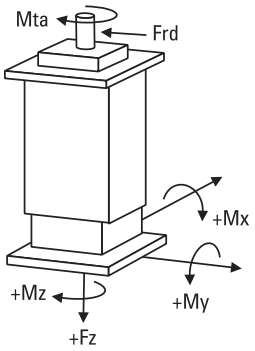

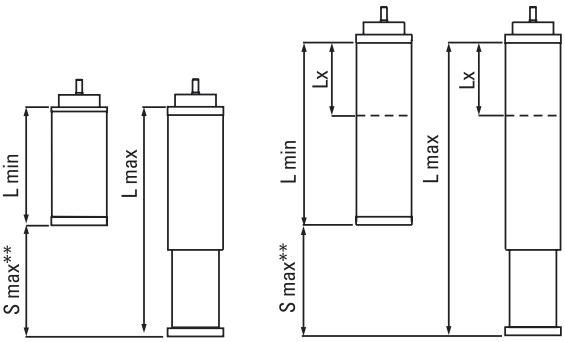

** S max = maximum stroke between the mechanical ends of the unit. The practical stroke is normally 100 mm shorter to avoid running into the ends of the unit.

Z2

Ball Screw Drive, Slide Guide

MGZ2K25
screw ø25 mm

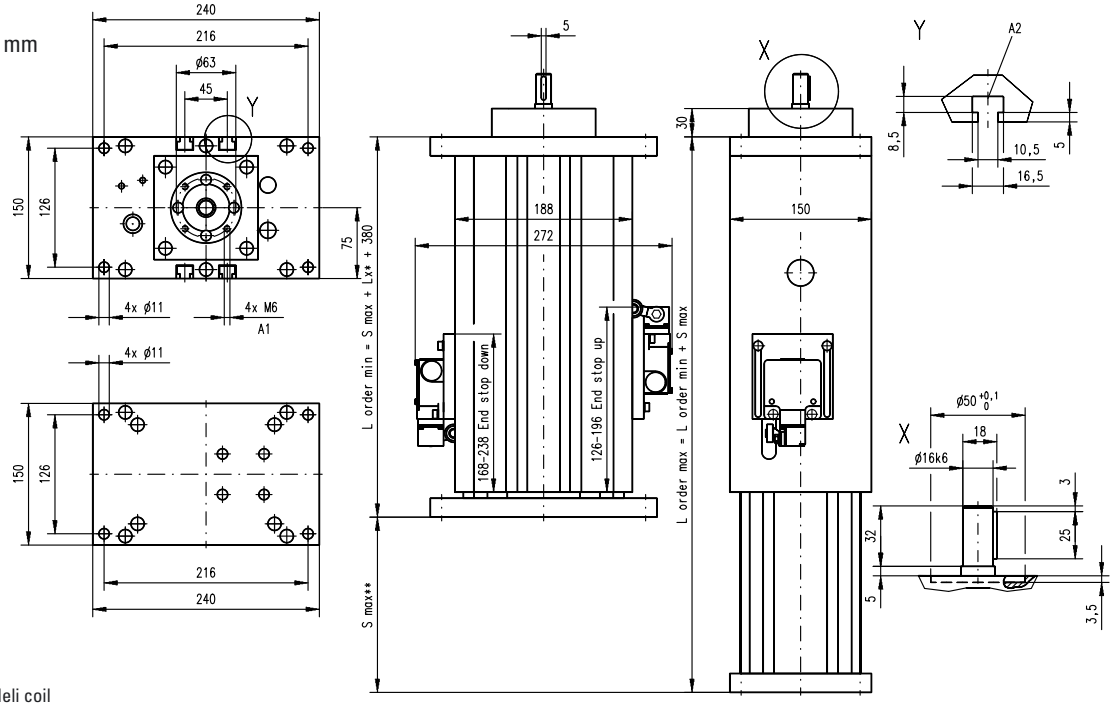

A1: depth 9, Heli coil
A2: T-slot

MGZ2K32
screw ø32 mm

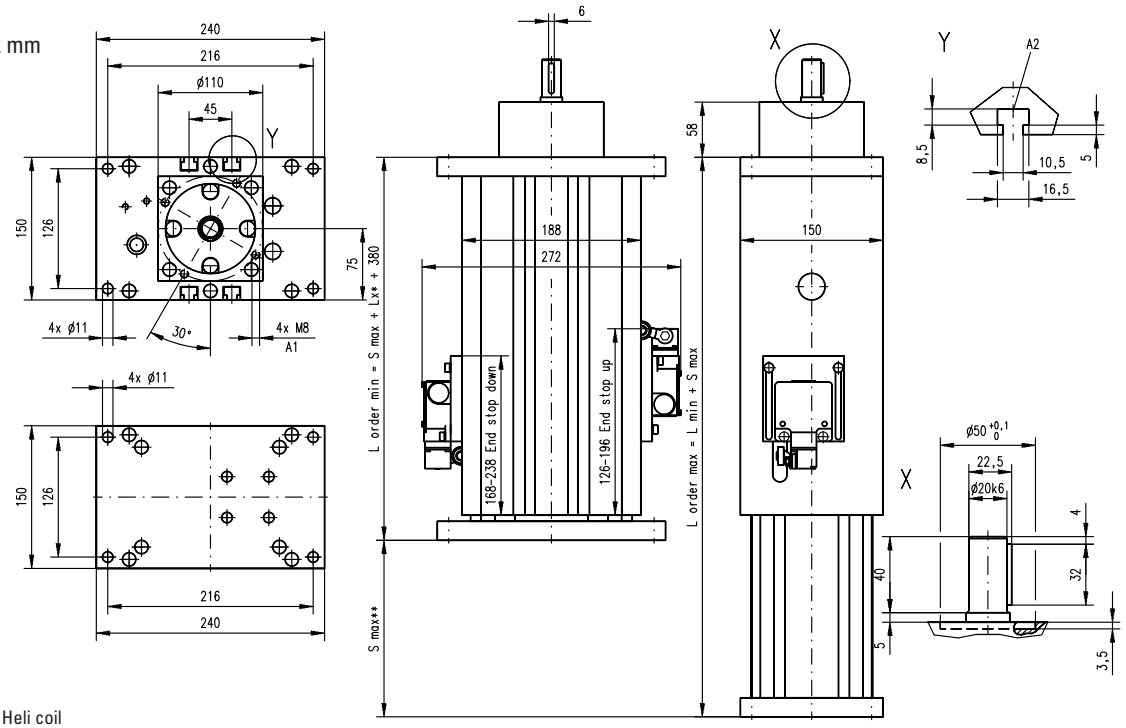

A1: depth 12, Heli coil
A2: T-slot

Type of unit	Minimum retracted length (L min) [mm]	Maximum extended length (L max) [mm]
Standard	L min = S max + 380	L max = L min + S max
Elongated*	L min = S max + 380 + Lx	L max = L min + S max

* Elongated versions have an extra length

Z3

Ball Screw Drive, Slide Guide

» Ordering key - see page 206
» Accessories - see page 127
» Additional data - see page 186

General Specifications

Parameter	Z3
Profile size (w × h) [mm]	188 × 150
Type of screw	ball screw with single nut
Sealing system	none
Screw supports	none
Lubrication	lubrication of screw and slide surfaces
Included accessories	none

Performance Specifications

Parameter		Z3
Stroke length (S max), maximum	[mm]	1500
Linear speed, maximum	[m/s]	1,25
Acceleration, maximum	[m/s²]	8
Repeatability	[± mm]	0,1
Input speed, maximum screw diameter/lead [mm] 25/10, 25/25 screw diameter/lead [mm] 32/20	[rpm]	 3000 2500
Operation temperature limits	[°C]	-20 – 70
Dynamic load (Fz), maximum screw diameter/lead [mm] 25/10, 25/25 screw diameter/lead [mm] 32/20	[N]	 5000 7500
Dynamic load torque (Mx), maximum	[Nm]	2000[1]
Dynamic load torque (My), maximum	[Nm]	2000[1]
Dynamic load torque (Mz), maximum	[Nm]	330[1]
Drive shaft force (Frd), maximum screw diameter/lead [mm] 25/10, 25/25 screw diameter/lead [mm] 32/20	[N]	 1000 1200
Drive shaft torque (Mta), maximum screw diameter/lead [mm] 25/10, 25/25 screw diameter/lead [mm] 32/20	[Nm]	 45 93
Screw versions, diameter (d0) / lead (p)	[mm]	25/10, 25/25, 32/20
Weight of unit with zero stroke, ball screw ø 25 mm of unit with zero stroke, ball screw ø 32 mm of every 100 mm of stroke, ball screw ø 25 mm of every 100 mm of stroke, ball screw ø 32 mm	[kg]	 21,14 22,65 4,20 4,50

[1] Value for the complete uniy

Idle Torque (M idle) [Nm]

Input speed [rpm]	Screw diameter/lead [mm]		
	d0 = 25 / p = 10	d0 = 25 / p = 25	d0 = 32 / p = 20
500	1,1	2,7	2,2

M idle = the input torque needed to move the lifting profiles without any load.

Critical Speed

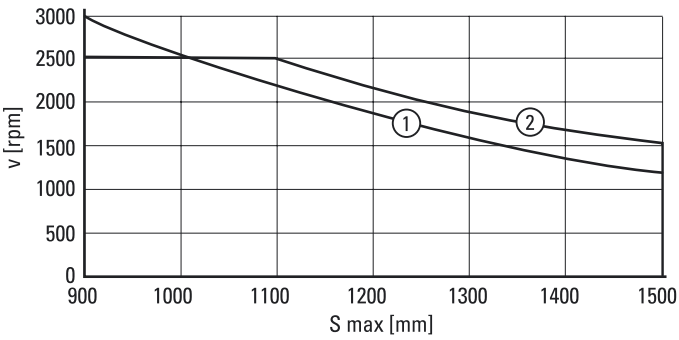

1: screw diameter 25 mm
2: screw diameter 32 mm

Definition of Forces and Stroke

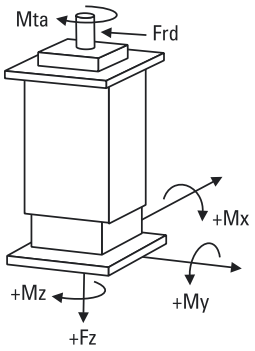

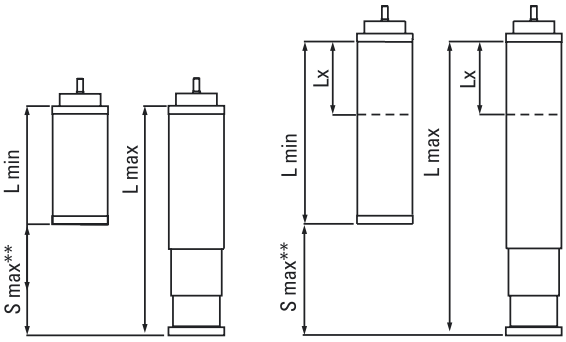

** S max = maximum stroke between the mechanical ends of the unit. The practical stroke is normally 100 mm shorter to avoid running into the ends of the unit.

Z3

Ball Screw Drive, Slide Guide

MGZ3K25
screw ø25 mm

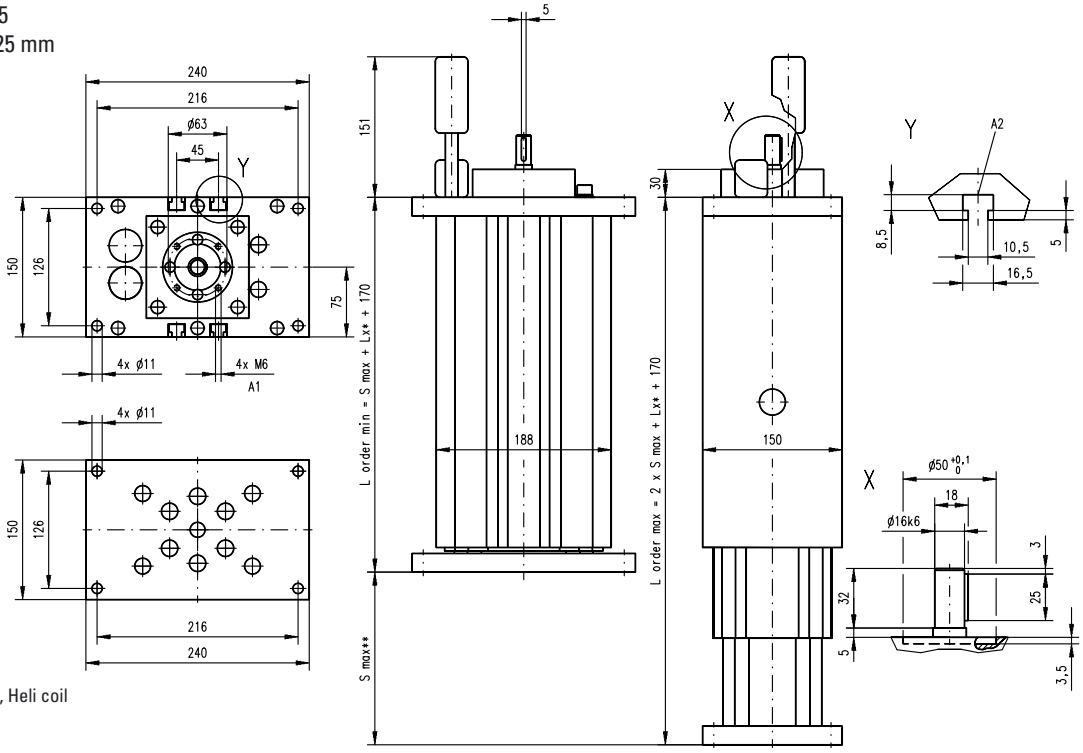

A1: depth 9, Heli coil
A2: T-slot

MGZ3K32
screw ø32 mm

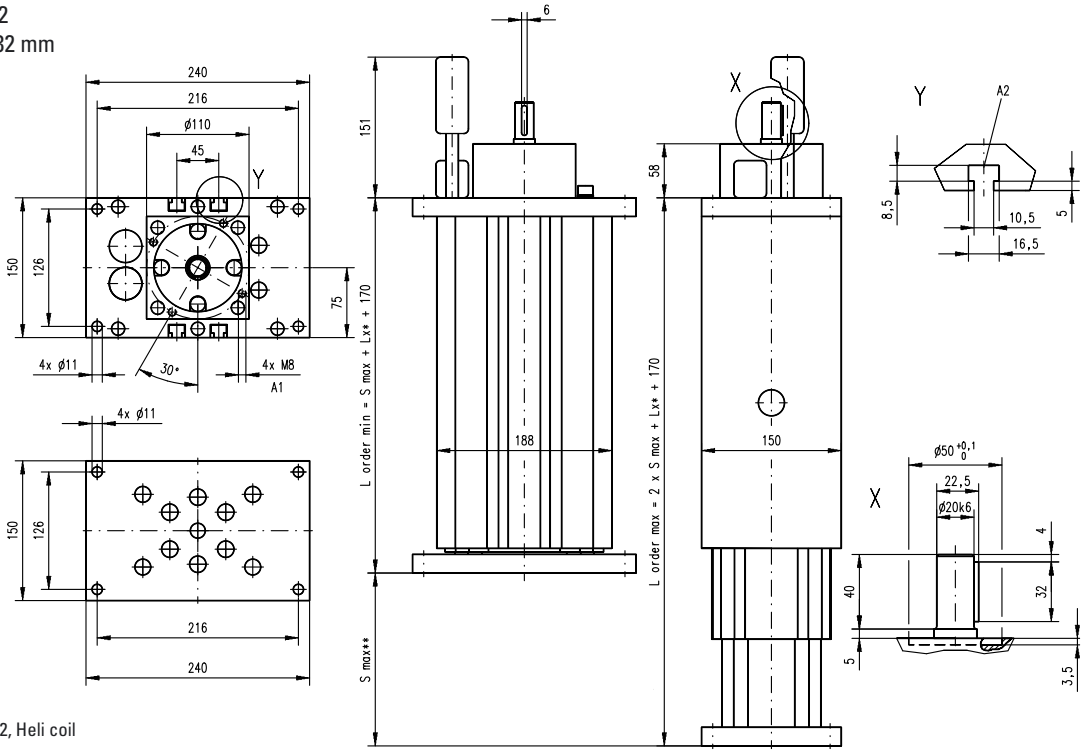

A1: depth 12, Heli coil
A2: T-slot

Type of unit	Minimum retracted length (L min) [mm]	Maximum extended length (L max) [mm]
Standard	L min = S max + 170	L max = L min + S max
Elongated*	L min = S max + 170 + Lx	L max = L min + S max

* Elongated versions have an extra length

ZB

Belt Drive, Ball Guide

» Ordering key - see page 207
» Accessories - see page 127
» Additional data - see page 186

General Specifications

Parameter	ZB
Profile size (w × h) [mm]	88 × 88
Type of belt	50 AT 10
Carriage sealing system	none
Adjustable belt tensioning	the belt can be retensioned by the customer if necessary
Lubrication	lubrication of drive station in two points
Included accessories	none

Performance Specifications

Parameter		ZB
Stroke length (S max), maximum	[mm]	2500
Linear speed, maximum	[m/s]	3,0
Acceleration, maximum	[m/s²]	40
Repeatability	[± mm]	0,1
Input speed, maximum	[rpm]	900
Operation temperature limits	[°C]	-20 – 70
Dynamic load (Fz), maximum	[N]	500
Dynamic load torque (Mx), maximum	[Nm]	445[1] / 3340[2]
Dynamic load torque (My), maximum	[Nm]	445[1] / 3340[2]
Dynamic load torque (Mz), maximum	[Nm]	35[1] / 262[2]
Drive shaft force (Frd), maximum	[N]	600
Drive shaft torque (Mta), maximum	[Nm]	34
Pulley diameter	[mm]	63,66
Stroke per shaft revolution	[mm]	200
Weight of unit with zero stroke of every 100 mm of stroke of the drive station box	[kg]	 15,50 0,86 16,20

[1] Value for the complete unit
[2] Value for the ball guide only

Idle Torque, (M idle) [Nm]

Input speed [rpm]	Idle torque [Nm]
500	6,4

M idle = the input torque needed to move the lifting profile with no load on it.

Definition of Forces

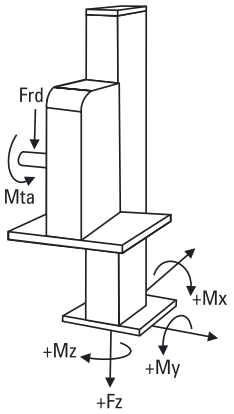

ZB

Belt Drive, Ball Guide

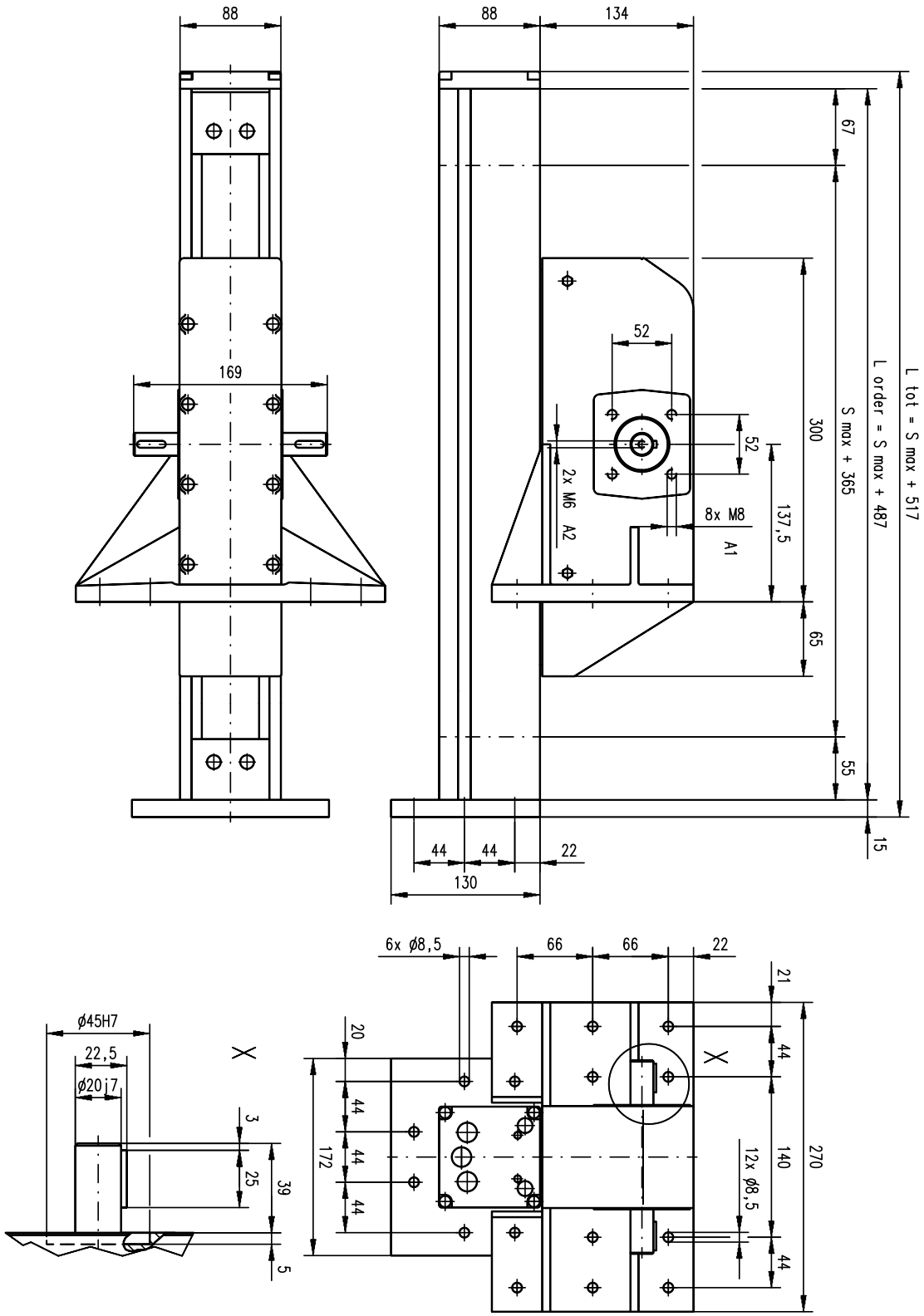

A1: depth 17
A2: depth 20

Linear Rod Units

VarioLine, Movotrak

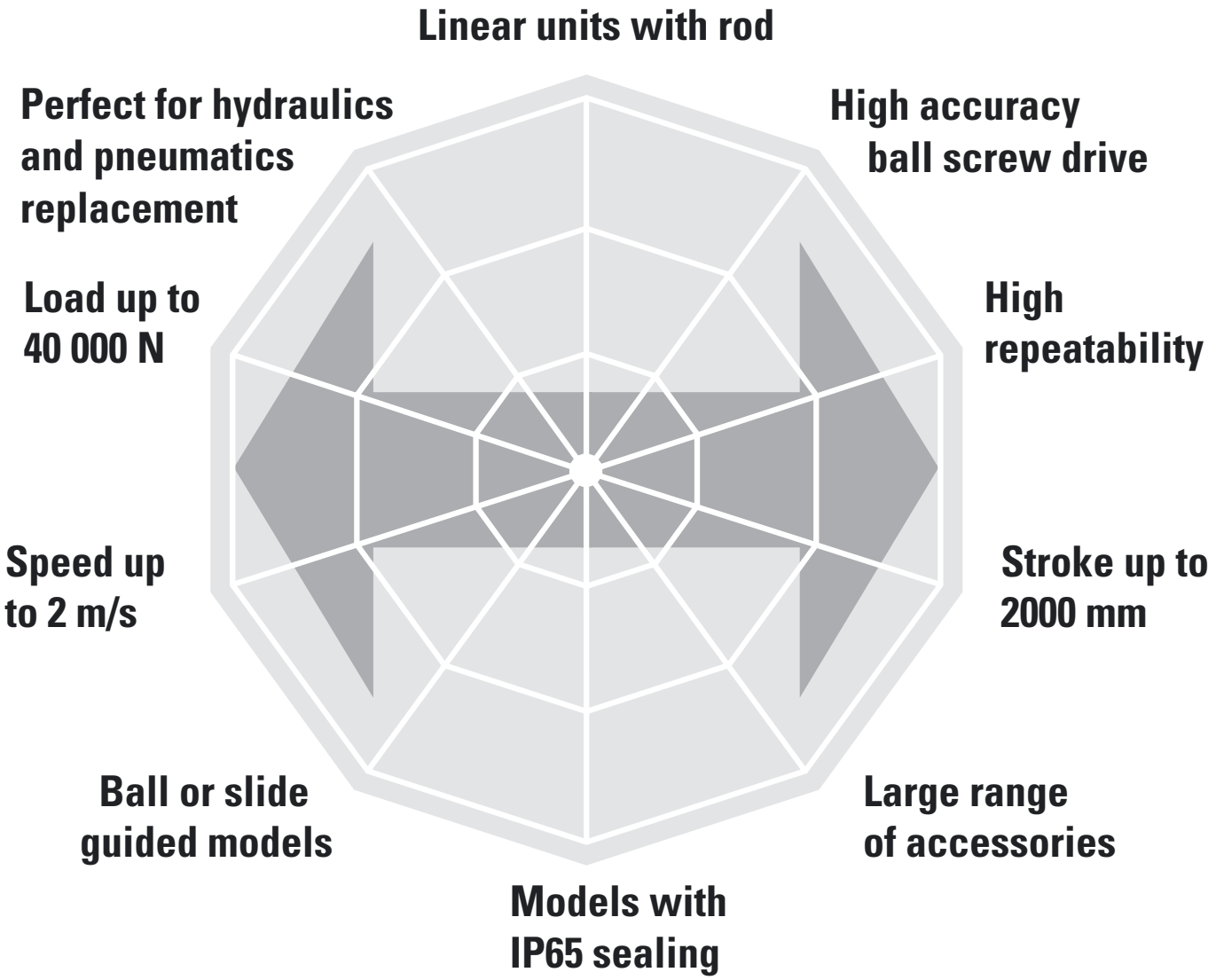

Typical Applications

Typical applications are where hydraulic and pneumatic cylinders needs to be replaced by an electrical solution or where a rod type unit is prefered. These units are also suited to harsh environments. Typical examples are valve control, machines in the plastic industry and as a Z-axis in various types of machines.

VarioLine WZ

Features

- Can be installed in all directions
- Ball screw drive
- Ball guides
- Compact

Parameter		WZ60
Profile size (width × height)	[mm]	60 × 60
Stroke length (S max), maximum	[mm]	400
Linear speed, maximum	[m/s]	1,5
Dynamic carriage load (Fx), maximum	[N]	2800
Remarks		
Page		120

Movotrak T

Features

- Can be installed in all directions
- Ball screw drive
- Slide guides
- Load up to 40000 N
- IP65 protection class
- Wash down protected versions available

Parameter		T90	T130
Profile size (width × height)	[mm]	90 × 92	130 × 130
Stroke length (S max), maximum	[mm]	1500	2000
Linear speed, maximum	[m/s]	2,0	2,0
Dynamic carriage load (Fx), maximum	[N]	20000	40000
Remarks		mounting accessories according to hydraulic cylinder standards available	mounting accessories according to hydraulic cylinder standards available
Page		122	124

WZ60

Ball Screw Drive, Ball Guide

» Ordering key - see page 208
» Accessories - see page 127
» Additional data - see page 187

General Specifications

Parameter	WZ60
Profile size (w × h) [mm]	60 × 60
Type of screw	single nut ball screw
Lubrication	central lubrication of all parts that require lubrication
Included accessories	4 × mounting clamps

Rod Idle Torque (M idle) [Nm]

Input speed [rpm]	Screw lead [mm]		
	p = 5	p = 20	p = 50
150	0,7	1,0	1,4
1500	1,1	1,6	2,0
3000	1,5	1,8	2,2

M idle = the input torque needed to move the rod with no load on it.

Performance Specifications

Parameter		WZ60
Stroke length (S max), maximum	[mm]	400
Linear speed, maximum	[m/s]	1,5
Acceleration, maximum	[m/s²]	20
Repeatability	[± mm]	0,02
Input speed, maximum	[rpm]	3000
Operation temperature limits	[°C]	0 – 80
Dynamic load (Fx), maximum	[N]	2800[2]
Dynamic load (Fy), maximum	[N]	2000[2]
Dynamic load (Fz), maximum	[N]	2000[1]
Dynamic load torque (Mx), maximum	[Nm]	50[1]
Drive shaft force (Frd), maximum	[N]	500
Drive shaft torque (Mta), maximum	[Nm]	30
Ball screw diameter (d_0)	[mm]	20
Ball screw lead (p)	[mm]	5, 20, 50
Weight	[kg]	
of unit with zero stroke		4,5
of every 100 mm of stroke		0,77
of the rod with zero stroke		1,8
of every 100 mm of rod		0,26

[1] Value for the complete unit
[2] See diagram Maximum Rod Side Forces (Fy, Fz)

Definition of Forces

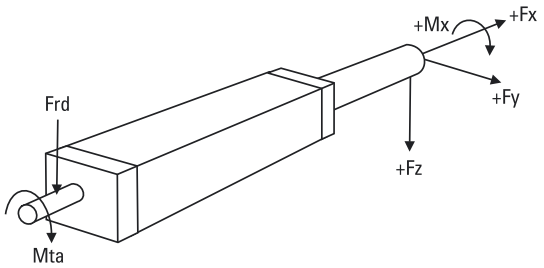

WZ60

Ball Screw Drive, Ball Guide

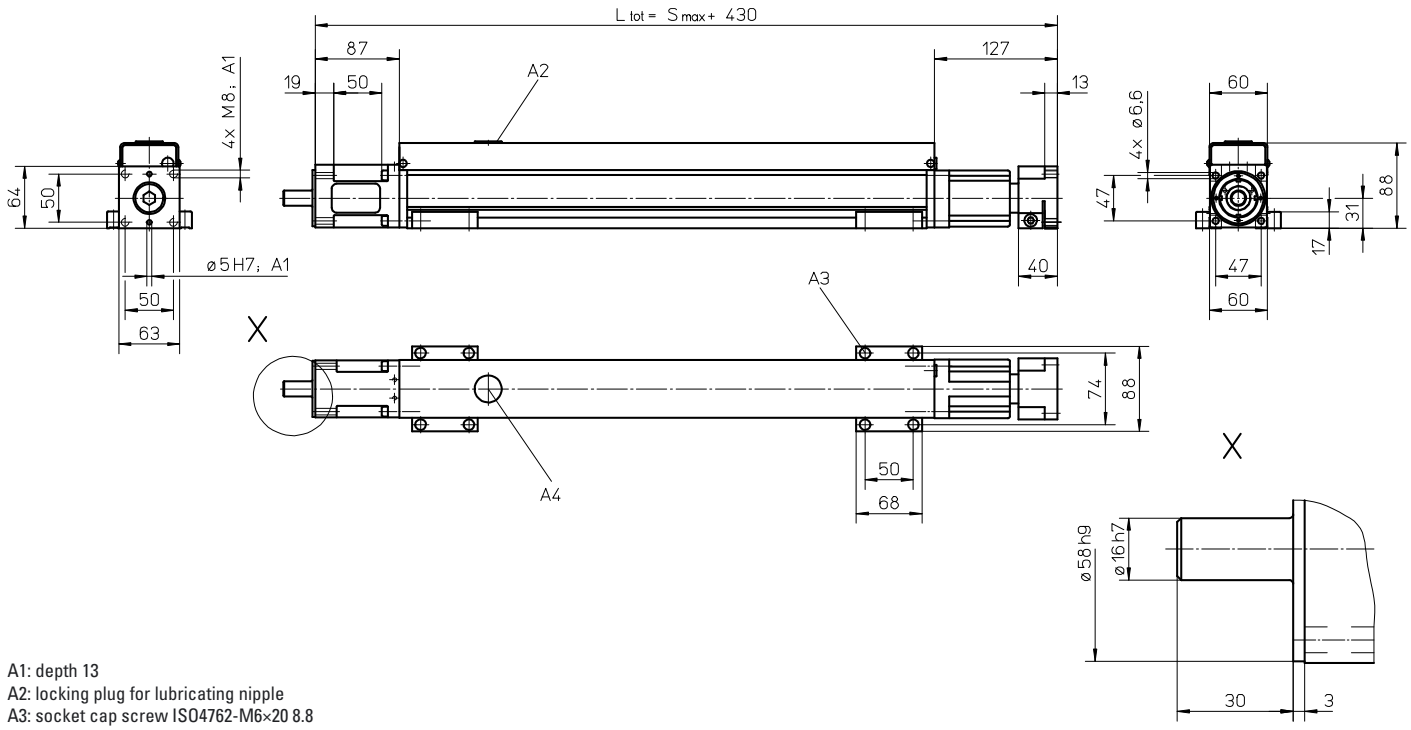

A1: depth 13
A2: locking plug for lubricating nipple
A3: socket cap screw ISO4762-M6×20 8.8
A4: tapered lubricating nipple to DIN71412 AM6 as standard feature

Maximum Rod Side Forces (Fy, Fz)

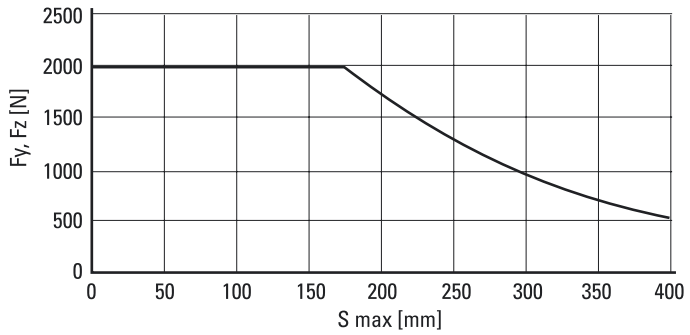

Deflection (f) of Rod due to Fy and Fz

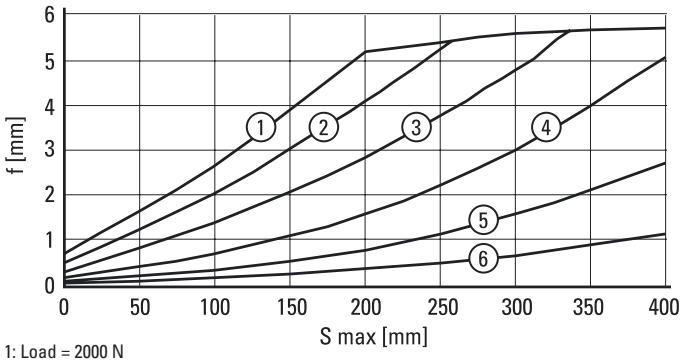

1: Load = 2000 N
2: Load = 1500 N
3: Load = 1000 N
4: Load = 500 N
5: Load = 250 N
6: Load = 125 N

Torsion (φ) of Rod due to Mx

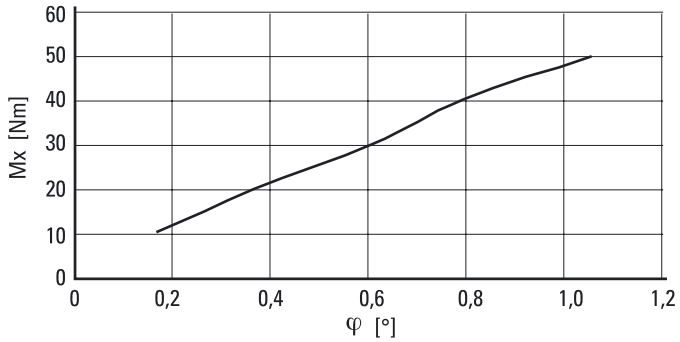

T90

Ball Screw Drive, Slide Guide

» Ordering key - see page 208
» Accessories - see page 127
» Additional data - see page 187

General Specifications

Parameter	T90
Profile size (w × h) [mm]	90 × 92
Type of screw	ball screw with single nut
Protection class	IP65
Lubrication	One point lubrication of ballscrew
Included accessories	–

Performance Specifications

Parameter		T90
Stroke length (S max), maximum	[mm]	1500
Linear speed, maximum	[m/s]	2,0
Acceleration, maximum	[m/s²]	8
Repeatability	[± mm]	0,05
Input speed, maximum screw diameter/lead 25/05 mm screw diameter/lead 25/10, 25/25 mm screw diameter/lead 32/20, 32/32 mm	[rpm]	 4000 4800 3750
Operation temperature limits	[°C]	-20 – 70
Dynamic load (Fx), maximum screw diameter 25 mm screw diameter 32 mm	[N]	 10000 20000
Dynamic load (Fy), maximum screw diameter 25 mm screw diameter 32 mm	[N]	 300[1] 500[1]
Dynamic load (Fz), maximum screw diameter 25 mm screw diameter 32 mm	[N]	 300[1] 500[1]
Dynamic load torque (Mz, My), maximum	[Nm]	150[1]
Drive shaft force (Frd), maximum screw diameter 25 mm screw diameter 32 mm	[N]	 1000 1300
Drive shaft torque (Mta), maximum screw diameter 25 mm screw diameter 32 mm	[Nm]	 48 93

[1] Value for the complete unit

Rod Idle Torque (M idle) [Nm]

Input speed [rpm]	Screw lead [mm]				
	p = 5	p = 10	p = 20	p = 25	p = 32
500	1,5	1,5	3,0	2,0	3,5

M idle = the input torque needed to move the rod with no load on it.

Definition of Forces

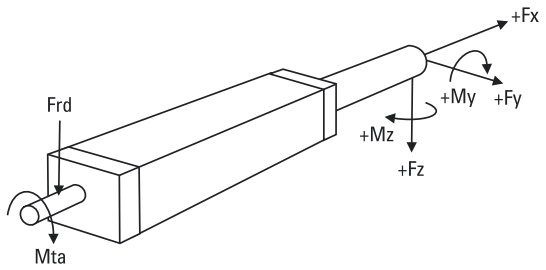

Performance Specifications

Parameter		T90
Screw versions, diameter (d0) / lead (p)	[mm]	25/05, 25/10, 25/25 32/20, 32/32
Weight of units with screw diameter 25 mm of unit with zero stroke of every 100 mm of stroke of the rod with zero stroke of every 100 mm of rod	[kg]	 8,16 1,62 0,52 0,60
Weight of units with screw diameter 32 mm of unit with zero stroke of every 100 mm of stroke of the rod with zero stroke of every 100 mm of rod	[kg]	 10,64 1,80 0,55 0,60

T90

Ball Screw Drive, Slide Guide

T09-B25
screw ø25 mm

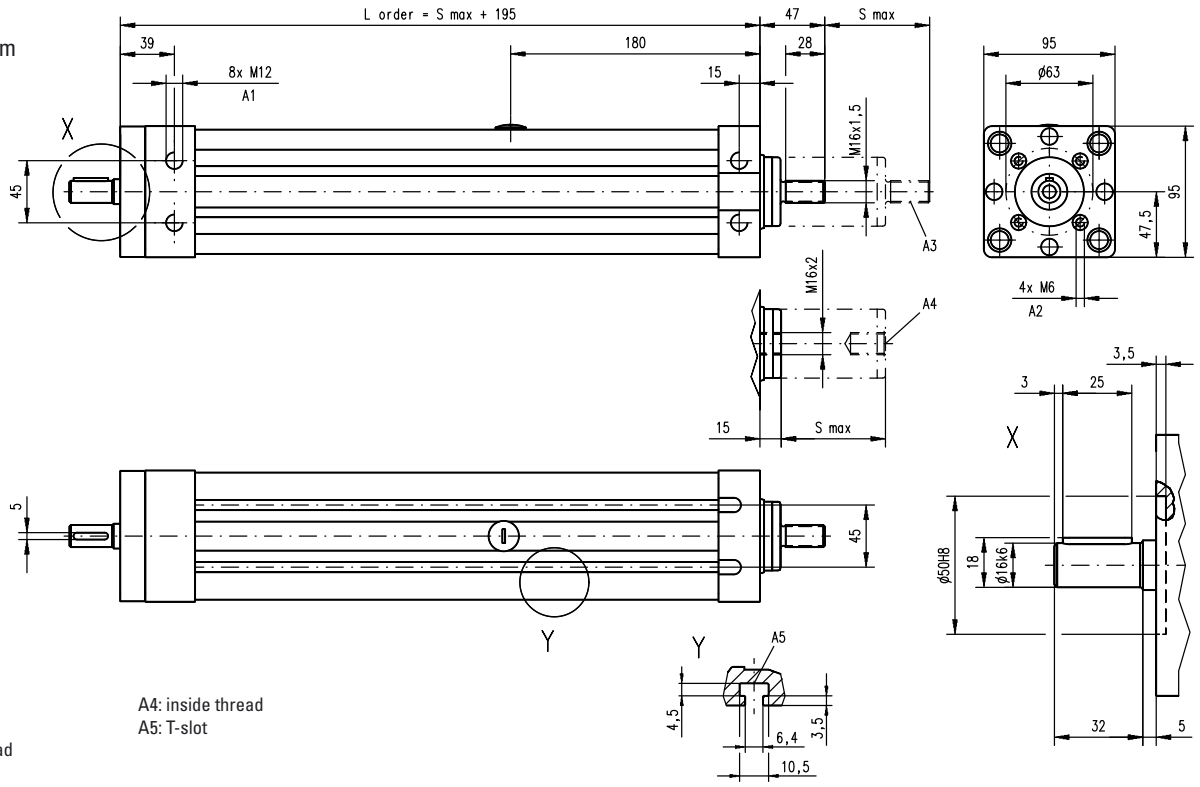

A1: depth 18
A2: depth 33
A3: outside thread

A4: inside thread
A5: T-slot

T09-B32
screw ø32 mm

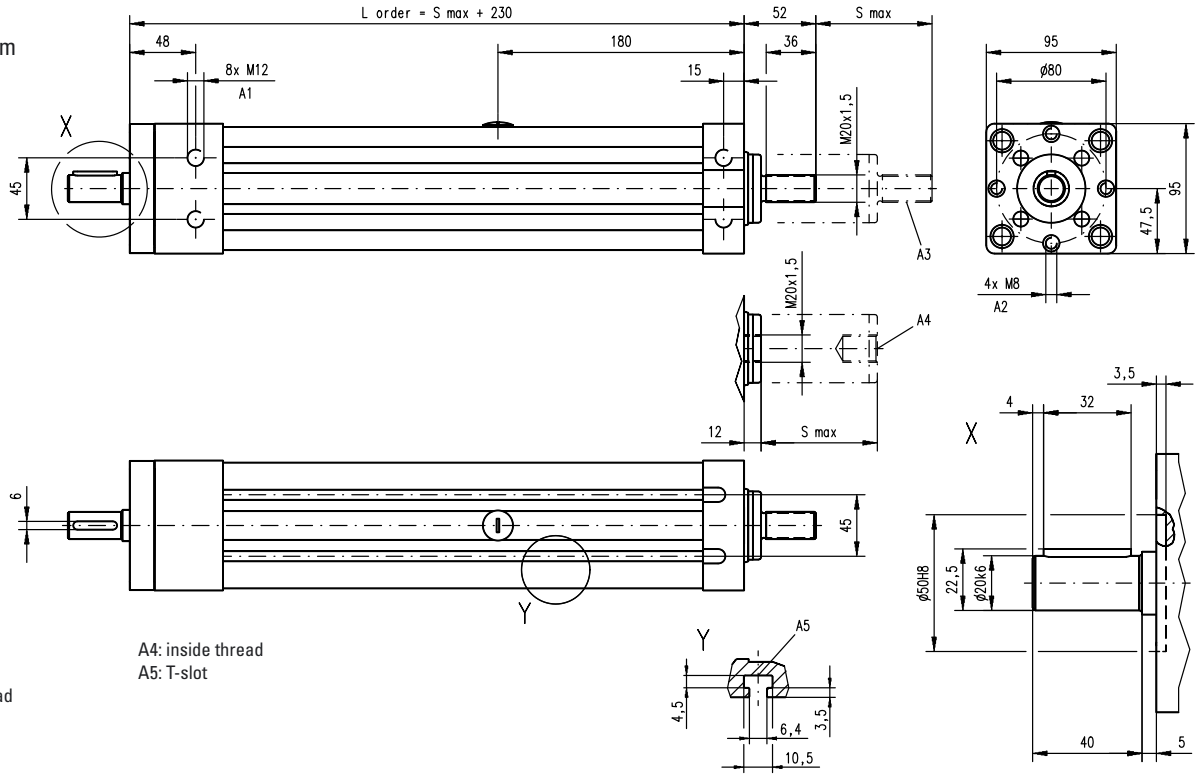

A1: depth 18
A2: depth 43
A3: outside thread

A4: inside thread
A5: T-slot

T130

Ball Screw Drive, Slide Guide

» Ordering key - see page 208
» Accessories - see page 127
» Additional data - see page 187

General Specifications

Parameter	T130
Profile size (w × h) [mm]	130 × 130
Type of screw	ball screw with single nut
Protection class	IP65
Lubrication	One point lubrication of ballscrew
Included accessories	–

Performance Specifications

Parameter		T130
Stroke length (S max), maximum	[mm]	2000
Linear speed, maximum	[m/s]	2,0
Acceleration, maximum	[m/s²]	8
Repeatability	[± mm]	0,05
Input speed, maximum screw lead 10 mm screw lead 20, 40 mm	[rpm]	 2500 3000
Operation temperature limits	[°C]	- 20 – 70
Dynamic load (Fx), maximum screw lead 10 mm screw lead 20 mm screw lead 40 mm	[N]	 40000 35000 15000
Dynamic load (Fy), maximum	[N]	800[1]
Dynamic load (Fz), maximum	[N]	800[1]
Dynamic load torque (My, Mz), maximum	[Nm]	300[1]
Drive shaft force (Frd), maximum	[N]	3000
Drive shaft torque (Mta), maximum	[Nm]	140
Ball screw diameter (p)	[mm]	40
Ball screw leads (d0)	[mm]	10, 20, 40
Weight of unit with zero stroke of every 100 mm of stroke of the rod with zero stroke of every 100 mm of rod	[kg]	 18,50 3,00 1,25 0,77

[1] Value for the complete unit

Rod Idle Torque (M idle) [Nm]

Input speed [rpm]	Screw lead [mm]		
	p = 10	p = 20	p = 40
500	4,5	4,5	5,5

M idle = the input torque needed to move the rod with no load on it.

Definition of Forces

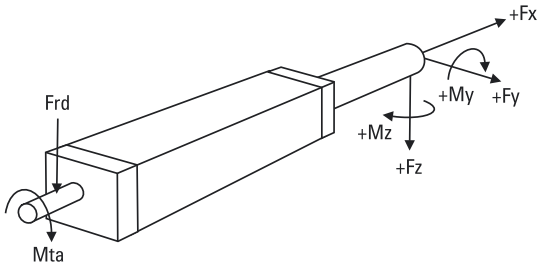

T130

Ball Screw Drive, Slide Guide

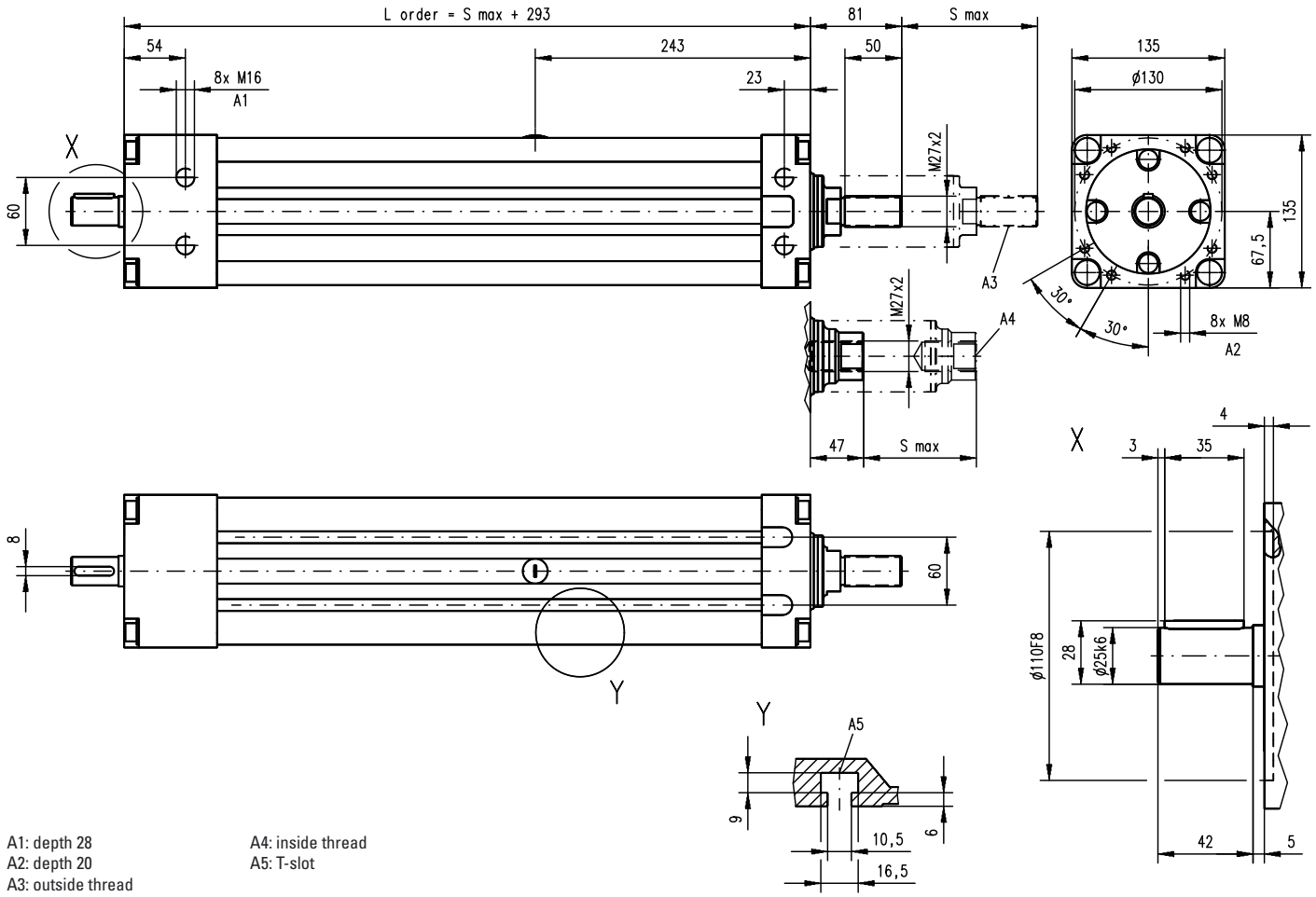

A1: depth 28
A2: depth 20
A3: outside thread
A4: inside thread
A5: T-slot

Accessories

Accessory index

Accessories

Mounting Kits

Mounting Clamps (single clamp)

Unit type	I	II	III	A	B	C	D	øE	F	øG	H	Screws	Ms [Nm]
WH40	–	890 885 0001	–	54	16	9,5	40	10	5,7	5,5	7	ISO4762-8.8	5,4
WH50	–	890 885 0001	–	54	16	9,5	40	10	5,7	5,5	7	ISO4762-8.8	5,4
WH80	–	890 190 02	–	68	17,5	17	50	11	6,5	6,6	7	ISO4762-8.8	9
WH120	–	890 192 13	–	80	25	18	50	15	8,5	9	10	ISO4762-8.8	20
WM40 / WB40	–	890 885 0001	–	54	16	9,5	40	10	5,7	5,5	7	ISO4762-8.8	5,4
WM60 / WV60 / WZ60	–	890 885 0001	–	68	17,5	17	50	11	6,5	6,6	7	ISO4762-8.8	9
WM80 / WV80	–	890 190 02	–	68	17,5	17	50	11	6,5	6,6	7	ISO4762-8.8	9
WM120 / WV120	–	890 192 13	–	80	25	18	50	15	8,5	9	10	ISO4762-8.8	20
MLS60	–	890 190 02	890 192 26	68/120	17,5	17	50	11	6,5	6,6	7	ISO4762-8.8	9
MLS80	–	890 192 13	890 192 31	80/200	25	18	50	15	8,5	9	10	ISO4762-8.8	20
M50 [1]	D312 248	–	–	25	30	20	–	–	–	6,5	14	ISO4762-8.8	9,4
M55 [1]	D313 403	D313 402	–	25/56	25,5	10,7	41	9,5	5,3	5,5	10,2	ISO4762-8.8	5,5
M75 [1]	D312 747	D312 748	–	30/75	28,5	15	60	14	8,5	8,5	11	ISO4762-8.8	23
M100 [1]	D312 339	D312 334	–	45/92	46,5	22	60	17	10,5	10,5	20	ISO4762-8.8	45

[1] no screws included in the shipment of these clamps

Ms = tightening torque of screws

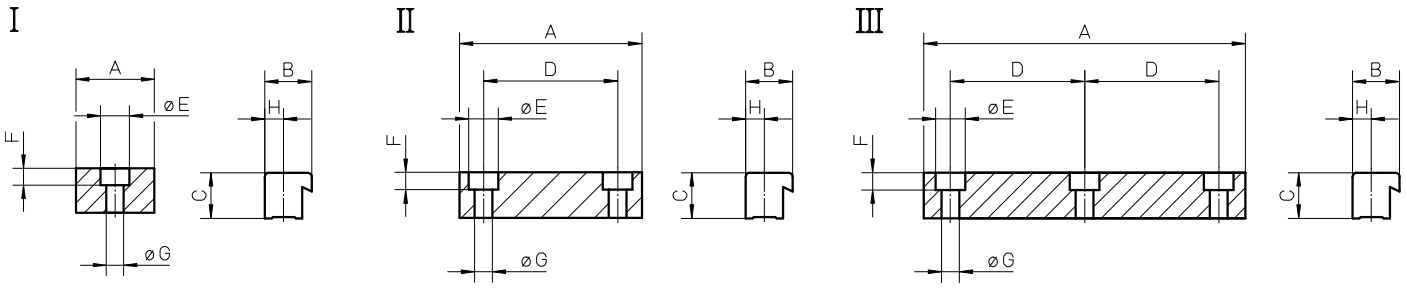

Accessories

Mounting Kits

Mounting Clamps with Plate[1]

Unit type	p/n	A	B	C	D	E	øF	øG	H
M50	D312 117	7	20	105	35	30	6,5	11	–
M55	D313 474	8,5	15	100	44	70	8,5	14	44
M75	D312 718	8,5	15	134	44	80	8,5	14	44
M100	D312 317	8,5	20	190	44	100	8,5	14	44

[1] two clamps of version II and screws to connect these to the plate are included in shipment

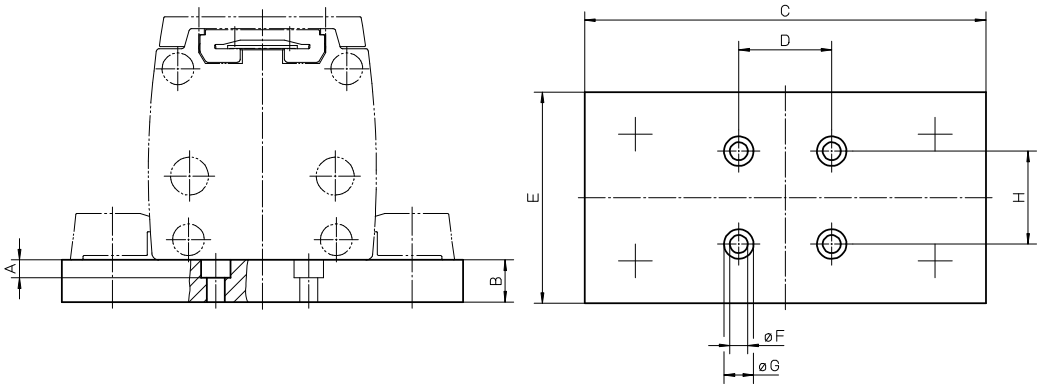

Accessories

Mounting Kits

Mounting Clamps for Multi Axis Systems[1]

Unit type X-axis	Unit type Y-axis	I	I I	A	B	C	D	øE	F	øG	H
WM40 / WH40	WM40 / WH40	890 883 0028	–	40	16	9,5	26	10	5,7	5,5	7
WM60	WM60	890 191 94	–	58	17,5	17	40	11	6,5	6,6	7
M55	M55	D313 424	–	56	25,5	10,7	41	9,5	5,3	5,5	10,2
M55	M75	–	D313 470	5,5	15	134	76	80	5,5	9,5	41
M75	M55	–	D313 060	-	15	134	76	80	M5 × 7,5	-	41
M75	M75	D312 719	–	75	28,5	15	60	14	8,5	8,5	11
M75	M100	–	D313 062	8,5	20	190	106	100	8,5	14	60
M100	M75	–	D313 292	-	20	190	106,5	100	M8 × 12	-	60
M100	M100	D312 304	–	92	46,5	22	60	17	10,5	10,5	20

[1] all necessary screws are included in the shipment

I

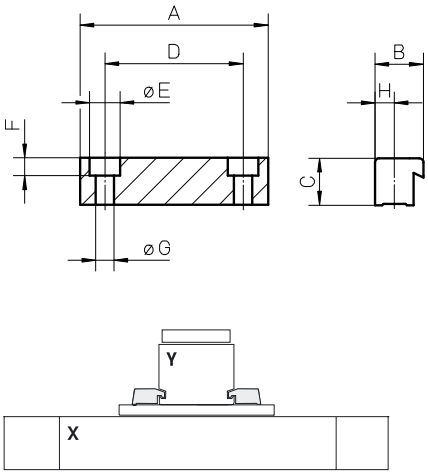

II

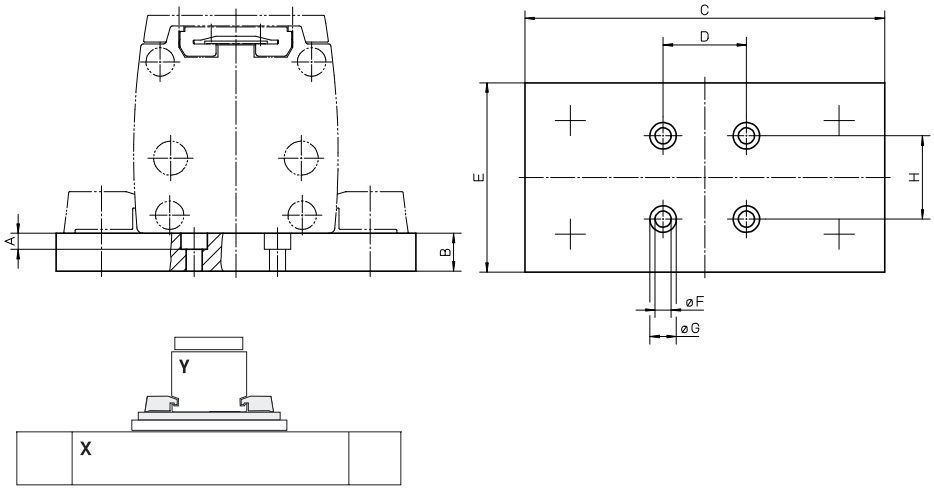

Accessories

Mounting Kits

Adapter Plates

Unit type	I	I I	A	B	C	D	E	øF	G
M55	D313 422	D313 423	40	60	20	38	25,5	6,5	37
M75	D312 746	–	40	–	26	-	45	6,5	51
M75	–	D312 745	–	60	-	39	45	7,5	51
M100	D312 338	–	40	–	26	-	69	6,5	62
M100	–	D312 337	–	60	-	39	69	7,5	62

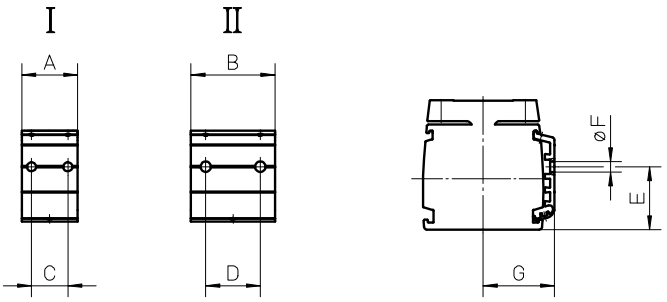

Adapter plates are fitted in the grooves along the profile and can be used to attach objects like sensors, swithes, cable ducts etc. to the unit.

Accessories

Mounting Kits

T-slot Bolts

Unit type	p/n	øD	H
M50	D312 221	M5	14
T90	D310 314	M6	18
T90	D310 311	M6	26
T130	D310 314	M6	18
T130	D310 311	M6	26
Z2	D800 089	M10	28
Z3	D800 089	M10	28

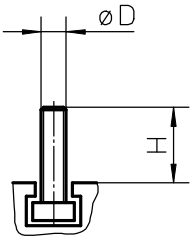

T-slot Nuts

Unit type	p/n	A	B	C	D	øE	F
2HBE10	D16965-A-01	7	4	1,75	3	M3	9
2HBE10	D16965-A-02-M4	9,5	5,5	2,25	4	M4	12
2HBE20	D16965-A-01	7	4	1,75	3	M3	9
2HBE20	D18063-A-04-M6	16,5	7,9	4,5	6	M6	7,9
ZB	D900 151	18	11	1,5	6,3	M6	25
ZB	D900 150	18	11	1,5	6,3	M8	25
MLS60	920 303 0037	16	8	4	6	M6	16
MLS80	920 303 0039	19,5	10	5,5	10,5	M8	20
WH120	911 044 19	15	10	6	12	M8	15
WM120	911 044 19	15	10	6	12	M8	15

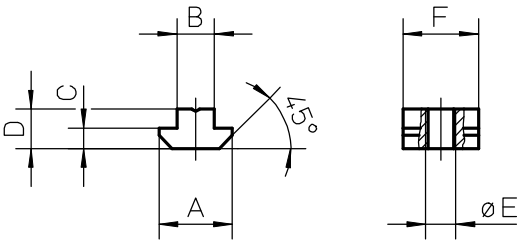

Accessories

Mounting Kits

Mounting Feet Kit (pair)

Unit type	p/n	A	B	C	D	E	F	G
T90 (T09-B25)	D606 225	40	155	20	125	15	ø13	141
T90 (T09-B32)	D606 225	40	155	20	125	15	ø13	162
T130	D606 157	60	220	30	176	22	ø17	216

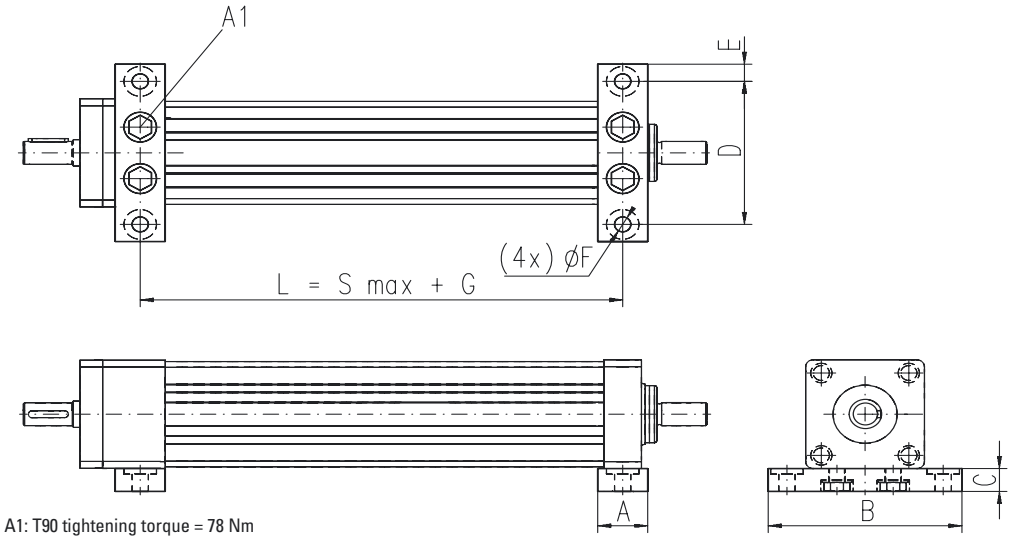

The mounting feet includes all neccessary screws to attach the feet to the unit.

A1: T90 tightening torque = 78 Nm
T130 tightening torque = 220 Nm

Trunnion Mounting Kit (pair)

Unit type	p/n	A	B	C	øD	E	F	G	H
T90	D606 030	150	45	240	20 f8	25	75	130	80
T130	D606 155	210	53	316	35 f8	30	93	180	110

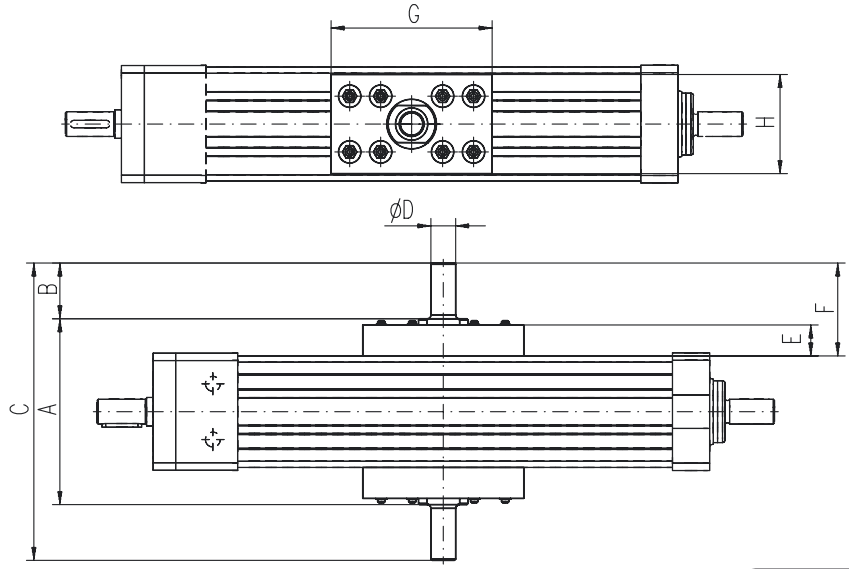

Accessories

Cover, Protection and Service Kits

FA Felt Pad Wiper

Unit type	Number of carriages on the unit	p/n	X
WH50	1	890 885 0064	6
WH50	2	2 × 890 885 0064	6
WH80	1	890 890 0069	7
WH80	2	2 × 890 890 0069	7
WH120	1	890 895 0058	8
WH120	2	2 × 890 895 0058	8
WHZ50	1	890 885 0064	6
WHZ50	2	2 × 890 885 0064	6
WHZ80	1	890 890 0069	7
WHZ80	2	2 × 890 890 0069	7

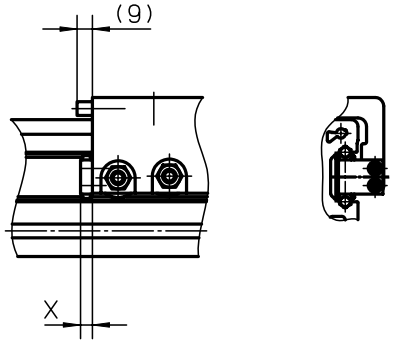

The felt pad wipers remove dust and dirt from the guides and are located on the carriage(s). They may increase the driving torque slightly but does not reduce the stroke of the unit. The felt pad wipers comes mounted from factory.

Environment Protection Option Type +S1 and +S2

Unit type	Drive type	Guide type	+S1	+S2	Ordering
M55	ball screw	slide	•		see ordering key of the unit for order
M55	belt drive	slide	•	•	see ordering key of the unit for order
		ball	•		see ordering key of the unit for order
M75	ball screw	slide	•		see ordering key of the unit for order
M75	belt drive	slide	•	•	see ordering key of the unit for order
		ball	•		see ordering key of the unit for order
M100	ball screw	slide	•		see ordering key of the unit for order
M100	belt drive	slide	•	•	see ordering key of the unit for order
		ball	•		see ordering key of the unit for order

+S1 - Wash down protection
Typical places where +S1 is used are in slaughter houses, dairy plants, food plants or in any other light wash down application.

+S2 - Chemical protection
Typical applications where +S2 is used are in wet areas in paper mills, galvanising equipment, chemical industry equipment or in any other application where water, acid and/or basic liquids are present.

Accessories

Cover, Protection and Service Kits

Protective Bellows

Unit type	p/n	B	B2	H	H1	H2	H4
2HBE10	BEL-2H-10	103	81	26	11	10	0
2HBE20	BEL-2H-20	199	167	48	30	15	5

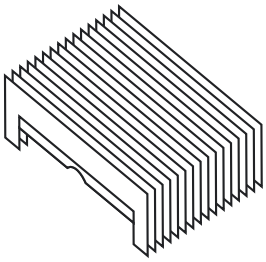

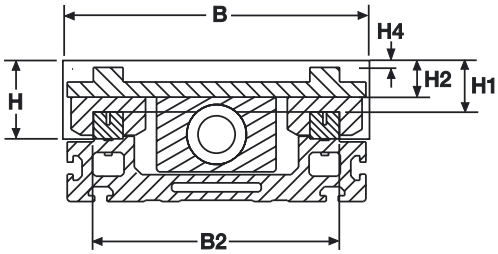

The protective bellows protect the entire unit from dust and dirt. Bellows option reduces the available stroke of the unit by about 28 %. Bellows can be ordered mounted from factory and in that case this is stated in the ordering key of the unit. It can also be ordered separately to be fitted by the customer. In this case the part number and the lenght of the bellows must be stated. For 2HBE10 the correct bellows lenght is max. stroke of the unit (Smax) + 100 while it for 2HBE20 is the max. stroke (Smax) + 200.

Protective Shrouds

Unit type	
2HBE10	see ordering key of the unit for order
2HBE20	see ordering key of the unit for order

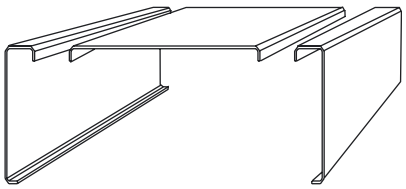

The protective shrouds are made of metal and protect the drive mechanism of the unit from dust and dirt but leaves the guides unprotected. Shrouds do not reduce the stroke of the unit but they will add 4 mm to the width of the unit. Shrouds are ordered mounted from factory and is stated in the ordering key of the unit.

Shaft Protection Cover

Unit type	p/n	A	B
M50	D312 201	126	35
M55	D312 201	151	35
M75	D700 178	198	45
M100	D700 178	202	45

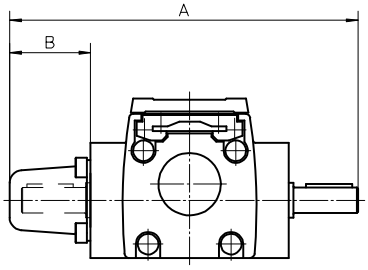

The shaft protection cover is used to cover shafts which is not being used. The cover is fitted by the customer.

Accessories

Cover, Protection and Service Kits

Complete Service Kit

Unit type	Content	p/n
M55, M75, M100	Service tools kit D350 050, spare parts kit D350 040, grease kit D350 060	D350 070

Service Tools Kit

Unit type	Content	p/n
M55, M75, M100	see table below	D350 050

Content in kit D350 050	p/n	Quantity
Wooden service box	D350 032	1
Frequency meter Breco SM3	D350 023	1
Socket head cap wrench set	D350 024	1
Mounting tube for M55 ball nut	D350 018	1
Mounting tube for M75 ball nut	D350 017	1
Mounting tube for M100 ball nut, s = 5, 10	D350 016	1
Mounting tube for M100 ball nut, s = 25	D350 015	1
Socket head cap wrench NV2 for M55, M75	D350 025	1
Socket head cap wrench NV3 for M100	D350 026	1
Hook spanner	D350 027	1
Withdrawing tool	D350 028	1
Lock ring tong for hole lock rings	D350 029	1
Lock ring tong for shaft lock rings	D350 030	1

Content in kit D350 050	p/n	Quantity
Grease gun	D350 031	1
Grease gun nipple	D313 090	1
Grease gun grease tube	D313 091	1
Crank handle	D350 022	1
Sleeve to crank handle for 20 mm shafts	D350 021	1
Sleeve to crank handle for 16 mm shafts	D350 020	1
Sleeve to crank handle for 11 mm shafts	D350 019	1
Ball guide rail piece for M55, L = 210 mm	D313 330	1
M55 belt drive profile piece	D313 332	4
M55 screw drive profile piece	D313 300	4
M75 profile piece	D312 700	4
M100 profile piece	D312 309	4

Accessories

Cover, Protection and Service Kits

Spare Parts Kit

Unit type	Content	p/n
M55, M75, M100	see table below	D350 040

Content in kit D350 040	p/n	Quantity
Coverband for M55 (M140)	D311 310	10 m
Coverband for M75 and M100	D310 210	10 m
Prism guide bushings for M55	D312 196	8
Prism guide bushings for M75	D312 831	8
Prism guide bushings for M100	D312 431	8
Cover band stretcher for M55	D313 434	2
Cover band stretcher for M75	D312 800	2
Cover band stretcher for M100	D350 873	2
Saddle end for M55	D313 400	2
Saddle end for M75	D312 832	2
Saddle end for M100	D313 433	2

Grease Kit

Unit type	Content	p/n
M55, M75, M100	see table below	D350 060

Content in kit D350 060	p/n	Quantity
Oil Klüber Constant GLY2100	D350 033	1 litre
Spray Klüber Microlube GL261	D350 034	250 ml
Grease Klüber Microlube GLY92	D350 035	400 g
Grease Klüber Staburag NBU30	D350 036	400 g
Grease SKF LGMT2/0,2	D350 037	200 g
Grease Klüber Polylube GA352P	D350 038	400 g

Accessories

Motors, Gears and Transmission Kits

Oldham type coupling, dimensions

p/n	Unit	øA	B	øC	øD	E	F	Mmax [Nm]
MCM-OLD-08-23	2HBE10	6,35	32,4	8	25,4	11,6	9,2	3,4
MCM-OLD-14-34	2HBE20	9,53	48,0	14	41,3	15,0	18,0	9,0

Mmax = max. input torque

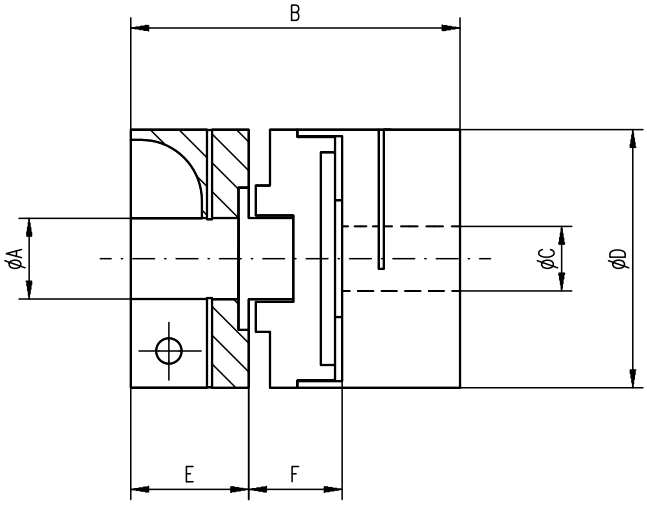

The Oldham type coupling is used to mount NEMA 23 or 34 frame size motors on 2HBE10 and 2HBE20 type of units.

Accessories

Motors, Gears and Transmission Kits

Bell House Flanges for IEC Motors

Unit type	IEC63 B14	A	IEC71 B14	A	IEC80 B14	A	IEC90 B14	A	IEC100/112 B14	A
M50	D390 820	64	D390 821	71	–	–	–	–	–	–
M55	D390 820	64	D390 821	71	–	–	–	–	–	–
M75	–	–	D390 823	83	D390 912	101	D390 916	101	–	–
M100 (MG10K)	–	–	D390 823	83	D390 913	101	D390 917	101	–	–
M100 (MG10B)	–	–	D390 823	83	D390 912	101	D390 916	101	–	–
T90 (T09-B25)	–	–	D390 823	83	D390 914	101	D390 918	101	–	–
T90 (T09-B32)	–	–	–	–	D390 922	101	D390 924	108	–	–
T130	–	–	–	–	–	–	D606 180	115	D606 181	125

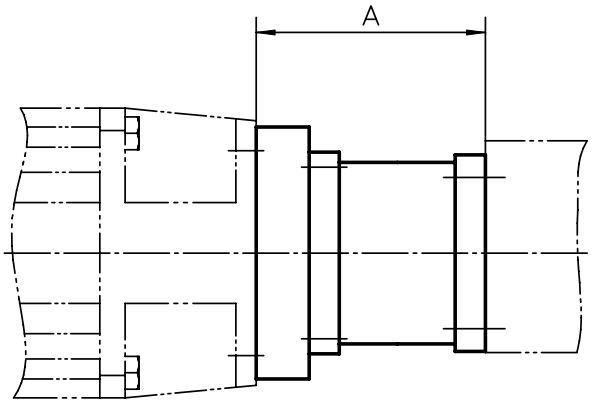

The bell house flange includes a matching coupling.

Accessories

Motors, Gears and Transmission Kits

MGK Bell House Flanges for AKM Servo Motors

Unit type	AKM3 • D-AN	A	AKM4 • D-AN	A	AKM5 • D-AN	A	AKM6 • D-AN	A	AKM7 • D-AN	A
WM40	on request	71	–	–	–	–	–	–	–	–
WB40	on request	63	–	–	–	–	–	–	–	–
WM60 / WV60 / WZ60	–	–	on request	89	on request	103	–	–	–	–
WM80 / WV80 / WZ80	–	–	–	–	on request	101	on request	117	–	–
WM120 / WV120	–	–	–	–	–	–	on request	121	on request	143
MLSM60	–	–	–	–	on request	98	–	–	–	–
MLSM80	–	–	–	–	–	–	on request	111	on request	133
M55 (MG06K)	D390 930	73	D389 939	91,5	–	–	–	–	–	–
M75 (MG07K)	–	–	D390 926	93	D390 909	107	–	–	–	–
M75 (MG07B)	–	–	D390 926	93	D390 909	107	–	–	–	–
M100 (MG10K)	–	–	D390 927	93	D390 910	107	–	–	–	–
M100 (MG10B)	–	–	D390 926	93	D390 909	107	–	–	–	–
T90 (T09-B25)	–	–	D390 928	93	on request	107	–	–	–	–
T90 (T09-B32)	–	–	–	–	D390 906	107	–	–	–	–
T130	–	–	–	–	–	–	D390 907	125	–	–

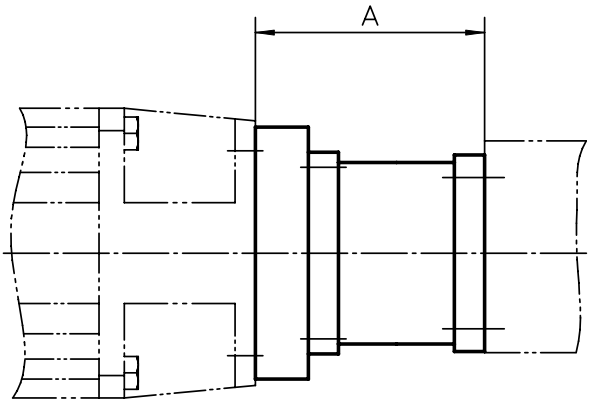

The bell house flange includes a matching coupling. Flanges for other units or motor sizes available on request, contact customer service.

Accessories

Motors, Gears and Transmission Kits

MGK Bell House Flanges for DBL Servo Motors

Unit type	DBL2H	A	DBL3H/M	A	DBL3N	A	DBL4N	A	DBL5N	A	DBL6N	A
WH40	–	–	891 092 0441	61	–	–	891 092 0931	90	–	–	–	–
WH50	–	–	–	–	–	–	891 092 0081	81	–	–	–	–
WH80	–	–	–	–	–	–	891 092 0077	88	891 092 0076	98	891 092 0046	113
WH120	–	–	–	–	–	–	891 092 0929	100	891 092 0086	110	–	–
WM40	891 092 0562	64	891 092 0429	64	–	–	891 092 0932	87	–	–	–	–
WB40	–	–	891 092 0429	56	–	–	–	–	–	–	–	–
WM60 / WV60 / WZ60	–	–	891 092 0878	78	891 092 0991	78	890 200 0135	89	891 092 0193	103	–	–
WM80 / WV80 / WZ80	–	–	–	–	891 092 0999	79	890 200 0136	91	891 092 0085	101	–	–
WM120 / WV120	–	–	–	–	–	–	8910 920 930	103	891 092 0085	113	891 092 0088	113
MLSH60	–	–	–	–	–	–	891 092 0928	91	–	–	–	–
MLSM60	–	–	–	–	891 092 0970	76	891 092 0893	88	891 092 0914	98	–	–
M75 (MG07K)	–	–	–	–	–	–	D390 919	101	–	–	–	–
M75 (MG07B)	–	–	–	–	–	–	D390 919	101	–	–	–	–
M100 (MG10K)	–	–	–	–	–	–	D390 920	101	–	–	–	–
M100 (MG10B)	–	–	–	–	–	–	D390 919	101	–	–	–	–
T90 (T09-B25)	–	–	D390 890	82	–	–	D390 921	101	–	–	–	–
T90 (T09-B32)	–	–	–	–	–	–	D390 925	108	–	–	–	–
T130	–	–	–	–	–	–	–	–	D606 182	115	–	–

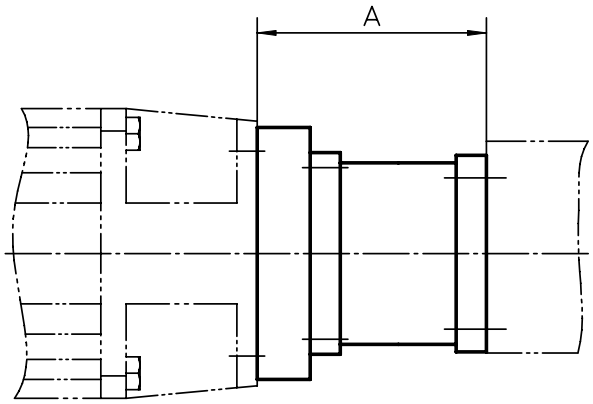

The bell house flange includes a matching coupling. Flanges for other units or motor sizes available on request, contact customer service.

Accessories

Motors, Gears and Transmission Kits

BS Worm Gears, dimensions

Gear	A	B	C	D	E	F
BS40	54	40	46	10	100	92
BS50	57	50	48	10	124	98

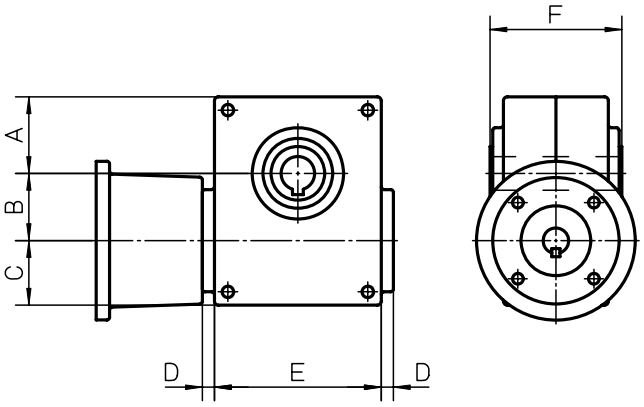

The worm gear includes the gear, the bell house and a matching coupling.

BS Worm Gears, compatability table

Unit	BS40	BS50	IEC71B14	IEC80B14	IEC90B14	A	L
T90 (T09-B32)	•		•			17	58
T90 (T09-B32)	•			•		17	68
T130		•	•			17	78
T130		•		•		17	88
T130		•			•	17	98
Z2 (MGZ2K32)	•		•			17	58
Z2 (MGZ2K32)	•			•		17	68

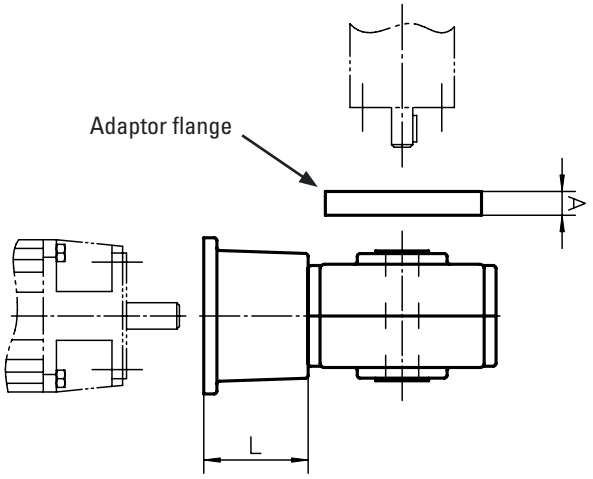

To be able to install the gear to the unit an adaptor flange must be used between the gear and the unit. The adaptor flange is ordered separately.

Accessories

Motors, Gears and Transmission Kits

BS40 Worm Belt Gears, ordering key

	1	2	3
Example	BS40	-10	-71

1. Type and size of worm gear	2. Gear ratio	6. Motor size
BS40 = BS40 worm gear	-3 = 3:1 -5,5 = 5,5:1 -7,5 = 7,5:1 -10 = 10:1 -15 = 15:1 -20 = 20:1 -24 = 24:1 -30 = 30:1 -40 = 40:1 -48 = 48:1 -60 = 60:1	-71 = IEC71B14 -80 = IEC80B14

BS50 Worm Belt Gears, ordering key

	1	2	3
Example	BS50	-37	-90

1. Type and size of worm gear	2. Gear ratio	6. Motor size
BS50 = BS50 worm gear	-8 = 8:1 -10,5 = 10,5:1 -14 = 14:1 -21 = 21:1 -24 = 24:1 -32 = 32:1 -37 = 37:1 -42 = 42:1 -54 = 54:1 -64 = 64:1 -81 = 81:1	-71 = IEC71B14 -80 = IEC80B14 -90 = IEC90B14

Adaptor flanges for BS40 and BS50 Worm Gears, part numbers

Unit	p/n
T90 (T09-B32)	D606 227
T130	D606 187
Z2 (MGZ2K32)	D606 250

Accessories

Motors, Gears and Transmission Kits

TBS4 Worm Gears, dimensions

Gear	A	B	C	D	E	F	øG	H	øI	J	K
TBS40	54	40	46	10	100	125	6	45	65	M8 (4×)	25

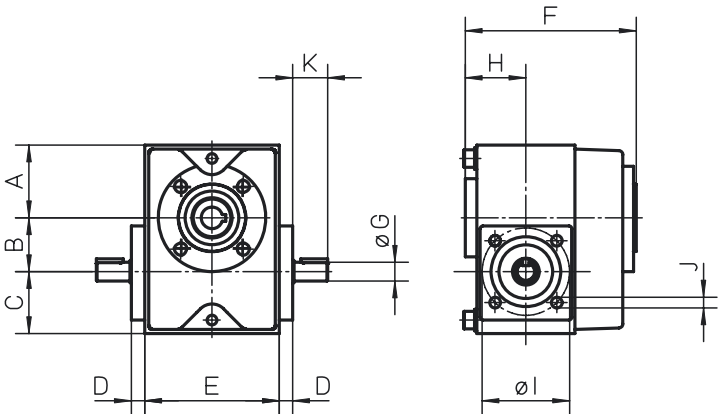

The worm gear is installed directly to the unit and require no intermediate coupling between the two.

TBS Worm Gears, compatability table

Unit	TBS40	IEC71B14	IEC80B14	A	L
T90 (T09-B25)	•	•		32	58
T90 (T09-B25)	•		•	32	68
Z2 (MGZ2K25)	•	•		32	58
Z2 (MGZ2K25)	•		•	32	68
Z3 (MGZ3K25)	•	•		32	58
Z3 (MGZ3K25)	•		•	32	68
M75	•	•		32	58
M75	•		•	32	68
M100	•	•		32	58
M100	•		•	32	68

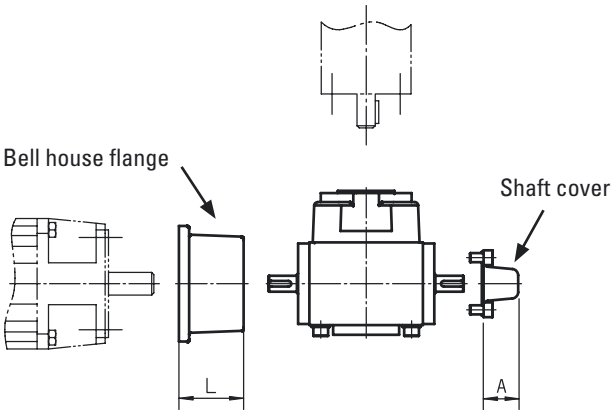

To be able to install the gear to the motor a bell house flange must be used between the gear and the motor. The bell house flange, which includes a matching coupling, is ordered separately. A shaft cover can be ordered to cover the second primary shaft on the gear in cases it is not being used.

Accessories

Motors, Gears and Transmission Kits

TBS40 Worm Belt Gears, ordering key

	1	2	3
Example	TBS40	-3	-216

1. Type and size of worm gear	2. Gear ratio	3. Fixed code
TBS40 = TBS40 worm gear	-3 = 3:1 -5,5 = 5,5:1 -7,5 = 7,5:1 -10 = 10:1 -15 = 15:1 -20 = 20:1 -24 = 24:1 -30 = 30:1 -40 = 40:1 -48 = 48:1 -60 = 60:1	-216

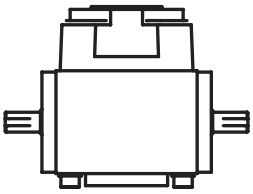

Bell house flanges for TBS40 Worm Gears, part numbers

Motor size	p/n
IEC71B14	D701 011
IEC80B14	D701 015

Shaft Cover for TBS40 Worm Gears, part numbers

Gear type	p/n
TBS40	D701 020

Accessories

Motors, Gears and Transmission Kits

RT Belt Gears, dimensions

Gear	A	B	C	D
RT40	110	30	176	68
RT60	175	74	345	170
RT80	175	74	345	170

RT40

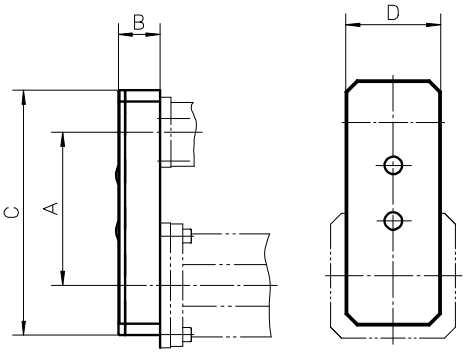

RT60/80

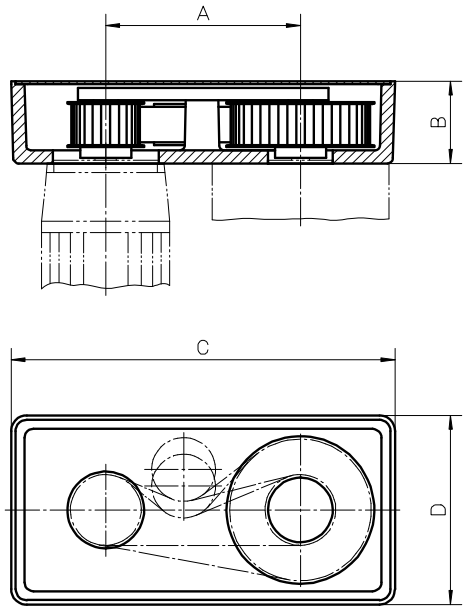

RT Belt Gears, data

Gear	i	nmax [rpm]	Mmax [Nm]	M idle [Nm]	η	J [kgm²]	Weight [kg}
RT40	1:1	3000	1,75	0,3	0,80	0,000025	0,62
RT60	1:1	3000	15	0,7	0,85	0,000438	5,6
RT60	2:1	3000	15	0,7	0,85	0,001011	7,1
RT80	1:1	3000	30	0,7	0,85	0,000465	5,5
RT80	2:1	3000	30	0,7	0,85	0,001038	7

i = gear ratio
nmax = max. input speed
Mmax = max. input torque
M idle = idle torque
η = effeciency factor
J = inertia

Accessories

Motors, Gears and Transmission Kits

RT Belt Gears, compatability table

Gear	WH40 / WM40	WM60 / WV60 / WZ60	WM80 / WV80	MLSM60D
RT40	•			
RT60		•		
RT80			•	•

RT Belt Gears, ordering key

	1	2	3	4	5
Example	RT80	-2	-• • •	-P-N	-05

1. Type and size of belt gear
RT40 = RT belt gear size 40
RT60 = RT belt gear size 60
RT80 = RT belt gear size 80

2. Gear ratio
-1 = 1:1
-2 = 2:1

3. Motor code
- • • • = alphanumeric motor code (e.g. -AK5). There are several motors that fits each gear and the list of suitable motors is continiously being updated. Please contact customer support for help to see which motors currently are on the list or if your prefered motor can be added to the list.

4. Type of mounting
-P-M = gear supplied unmounted
-P-N = gear supplied mounted to the unit

5. Compatable unit type
-01 = WH40
-02 = WH50
-03 = WH80
-04 = WH120
-05 = WM40
-06 = WM60
-07 = WM80
-08 = WM120
-09 = WV60
-10 = WV80
-11 = WV120
-12 = WHZ50
-13 = WHZ80
-14 = WZ60
-15 = WZ80
-16 = MLSH60Z
-17 = MLSH80Z
-18 = MLSM80Z
-19 = MLSM60D
-20 = MLSM80D

Accessories

Motors, Gears and Transmission Kits

BGM Belt Gears, dimensions

Gear	A	B	C	D	øE	F	G	H	I	J
BGM09	118,7	52	255	140	20 H9	95	115	60	–	–
BGM41	155,2	70	305	165	25 H9	122	147	70	–	–
BGM81	200	73	399	224	30 H9	134	159	90	90H14	170

The belt gear comes in parts and is assembled to the unit and motor by the customer.

BGM09/41/81 - WITHOUT CLEVIS OPTION

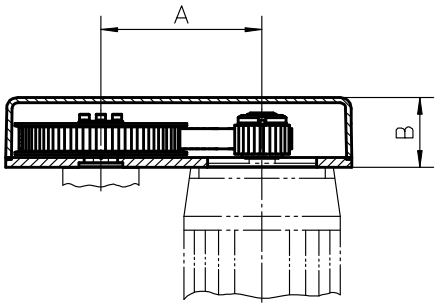

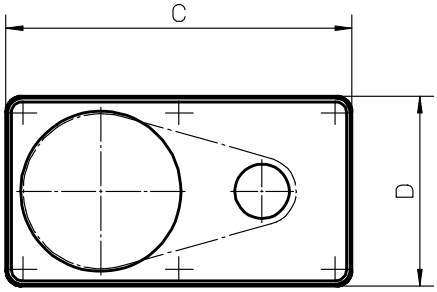

BGM09/41/81 - WITH CLEVIS OPTION TYPE S

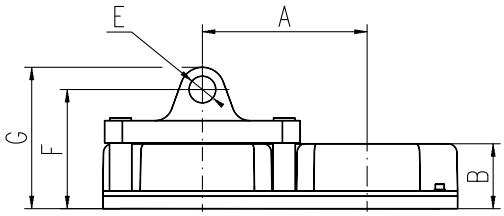

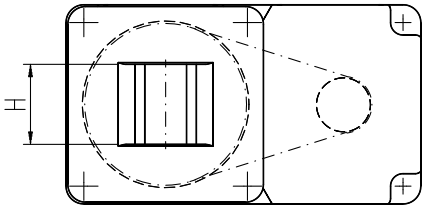

BGM81 - WITH CLEVIS OPTION TYPE R

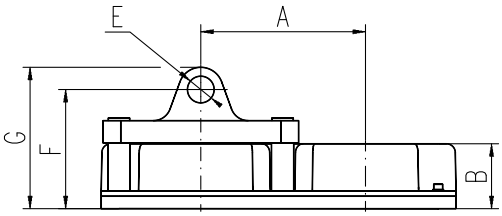

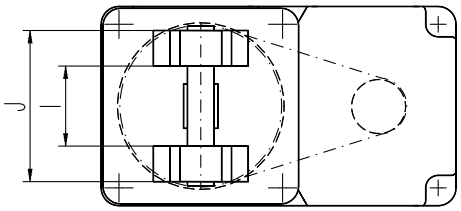

Accessories

Motors, Gears and Transmission Kits

BGM Belt Gears, data

Gear	i	nmax [rpm]	Mmax [Nm]	η	J [kgm²]	Weight [kg}
BGM09	1,04:1	4000	3,3	0,85	0,000102	2
BGM09	1,85:1	4000	3,3	0,85	0,000112	2,1
BGM09	2,85:1	4000	3,3	0,85	0,000213	2,5
BGM41	1:1	4000	16,6	0,85	0,000438	3,4
BGM41	2:1	4000	9,7	0,85	0,000342	3,7
BGM41	3:1	4000	9,7	0,85	0,000583	4,6
BGM81	1:1	4000	32	0,85	0,000836	12,1
BGM81	2,25:1	4000	30	0,85	0,001051	12,9
BGM81	3,13:1	4000	28	0,85	0,001439	14

i = gear ratio
nmax = max. input speed
Mmax = max. input torque
η = effeciency factor
J = inertia

BGM Belt Gears, compatability table

Gear	WM/V/Z60	WM/V80	WM/V120	MLSM60D	MLSM80D	MLSH80Z	M50	M55	M75	M100	Z2	T90 (T09-B25)	T90 (T09-B32)	T130
BGM09	•						•	•	•			•		
BGM41	•	•						•	•	•	•	•	•	•
BGM81			•	•	•	•								•

BGM Belt Gears, Ordering Keys

See next page for ordering keys.

Accessories

Motors, Gears and Transmission Kits

BGM 09 Belt Gears, ordering key

	1	2	3	4	5	6	7
Example	BGM09	-2	-CC	063	P	050	X

1. Type and size of belt gear
BGM09 = BGM belt gear size 09

2. Gear ratio
-1 = 1,04:1
-2 = 1,85:1
-3 = 2,85:1

3. Type of couplings
-CC = conical couplings

4. Motor size[1]
063 = IEC 63 B14
071 = IEC 71 B14
S80 = servo motor size 80
AK4 = servo motor type AKM 4

5. Type of mounting
P = standard

6. Compatable unit type
W06 = WM60, WV60, WZ60
050 = M50
060 = M55
070 = M75
09A = T90 (T09-B25)
130 = T130

7. Clevis option
X = no clevis option
S = clevis option type S

[1]This is only a selection of all motors that fits this gear. Please contact customer support to see if your prefered motor fits the gear.

BGM 41 Belt Gears, ordering key

	1	2	3	4	5	6	7
Example	BGM41	-1	-CC	071	P	070	X

1. Type and size of belt gear
BGM41 = BGM belt gear size 41

2. Gear ratio
-1 = 1:1
-2 = 2:1
-3 = 3:1

3. Type of couplings
-CC = conical couplings

4. Motor size[1]
071 = IEC 71 B14
080 = IEC 80 B14
S80 = servo motor size 80
S95 = servo motor size 95
AK5 = servo motor type AKM 5

5. Type of mounting
P = standard

6. Compatable unit type
W06 = WM60, WV60, WZ60
W08 = WM80, WV80
060 = M55
070 = M75
10B = M100 (MF/G10B)
10K = M100 (MF/G10K/C/D)
09A = T90 (T09-B25)
09B = T90 (T09-B32)
130 = T130

7. Clevis option
X = no clevis option
S = clevis option type S

[1]This is only a selection of all motors that fits this gear. Please contact customer support to see if your prefered motor fits the gear.

Accessories

Motors, Gears and Transmission Kits

BGM 81 Belt Gears, ordering key

	1	2	3	4	5	6	7
Example	BGM81	-1	-CC	090	P	M6D	X

1. Type and size of belt gear
BGM81 = BGM belt gear size 81

2. Gear ratio
-1 = 1:1
-2 = 2,25:1
-3 = 3,13:1

3. Type of couplings
-CC = conical couplings

4. Motor size[1]
090 = IEC 90 B14
100 = IEC 100/121 B14
A20 = servo motor size A200
AK6 = servo motor type AKM 6

5. Type of mounting
P = standard

6. Compatable unit type
W12 = WM120, WV120
M6D = MLSM60D
M8D = MLSM80D
M8Z = MLSH80Z
130 = T130

7. Clevis option
X = no clevis option
S = clevis option type S
R = clevis option type R

[1]This is only a selection of all motors that fits this gear. Please contact customer support to see if your prefered motor fits the gear.

Accessories

Motors, Gears and Transmission Kits

KRG VL0/1/2-Ba40 Bevel Gears, dimensions

Unit	Gear	Unit adaptor flange p/n	Bevel gear p/n		A	øB	øC	øD
			i = 1:1	i = 2:1				
WM40	VL0-Ba40	89 10 92 05 20	89 01 50 33	–	65	44	44	12
WM60 / WV60 / WZ60	VL0-Ba40	89 10 92 09 96	89 01 50 33	–	65	64,5	64,5	12
WM60 / WV60 / WZ60	VL1-Ba40	89 10 92 00 59	03 27 05 00 21	03 27 05 00 22	90	90	60	18
WM80 / WV80	VL1-Ba40	89 10 92 00 62	03 27 05 00 21	03 27 05 00 22	90	90	60	18
WM120 / WV120	VL2-Ba40	89 10 92 00 65	03 27 05 00 25	03 27 05 00 26	120	120	80	25
MLSM60D	VL1-Ba40	89 10 92 08 69	03 27 05 00 21	03 27 05 00 22	90	90	60	18
MLSM60D	VL2-Ba40	89 10 92 08 70	03 27 05 00 25	03 27 05 00 26	120	120	80	25
MLSM80D	VL2-Ba40	89 10 92 10 20	03 27 05 00 25	03 27 05 00 26	120	120	80	25

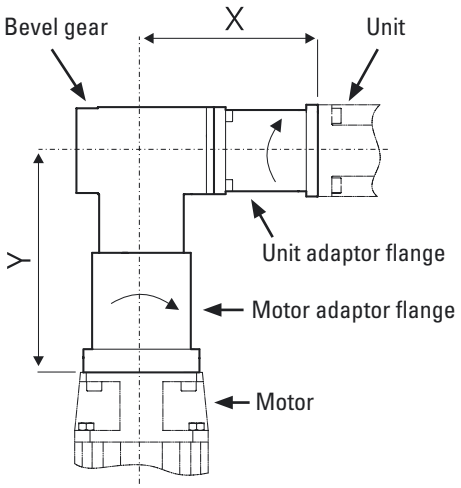

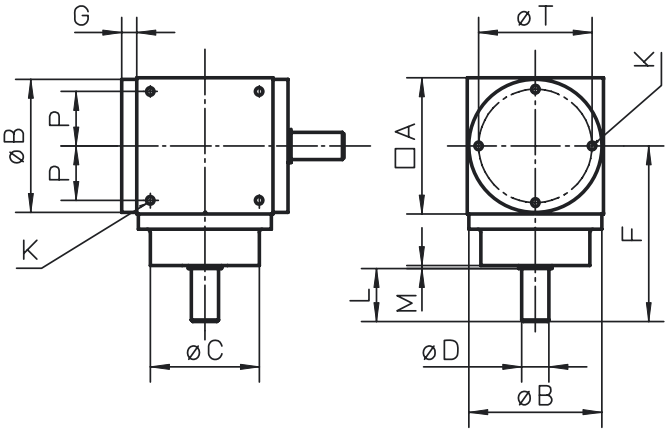

The bevel gear comes mounted from factory. To get a complete gear you must choose correct unit adaptor flange, bevel gear and motor adaptor flange. A matching coupling between the motor and the motor adaptor flange is included.

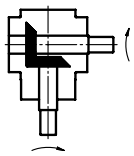

Accessories

Motors, Gears and Transmission Kits

F	G	K	L	M	P	øT	X	Motor	Motor adaptor flange p/n	Y
100	11,5	M6	26	2	22,5	54	113	DBL3N00300	89 10 92 09 97	143
100	9,5	M6	26	2	22,5	54	121	DBL3N00300	89 10 92 09 97	143
122	12	M8	35	2	35	75	144	DBL4N	89 10 92 00 60	180
								DBL5N	89 10 92 00 79	190
								DBL7N	89 10 92 00 80	200
122	12	M8	35	2	35	75	144	DBL4N	89 10 92 00 60	180
								DBL5N	89 10 92 00 79	190
								DBL7N	89 10 92 00 80	200
162	15	M10	45	2	50	100	185	DBL4N	89 10 92 01 30	222
								DBL5N	89 10 92 00 66	232
								DBL7N	89 10 92 00 72	240
122	12	M8	35	2	35	75	143	DBL4N	89 10 92 00 60	180
								DBL5N	89 10 92 00 79	190
								DBL7N	89 10 92 00 80	200
163	15	M10	45	2	50	100	170	DBL4N	89 10 92 01 30	222
								DBL5N	89 10 92 00 66	232
								DBL7N	89 10 92 00 72	240
163	15	M10	45	2	50	100	170	DBL4N	89 10 92 01 30	222
								DBL5N	89 10 92 00 66	232
								DBL7N	89 10 92 00 72	240

i = gear ratio

KRG VL0/1/2-Ba40 Bevel Gears, data

Gear	Mmax [Nm]		nmax [rpm]	M idle [Nm]	η	J [kgm²]		Weight [kg]	Backlash [arc min]
	i = 1:1	i = 2:1				i = 1:1	i = 2:1		
VL0-Ba40	10	–	3000	0,1	0,97	0,000062	0,00002	2	10
VL1-Ba40	28	28	3000	0,15	0,97	0,000358	0,000088	5,5	10
VL2-Ba40	60	60	3000	0,3	0,97	0,001202	0,000421	12	10

i = gear ratio
Mmax = max. input torque
η = effeciency factor
nmax = max. input speed
M idle = idle torque
J = inertia

Accessories

Motors, Gears and Transmission Kits

KRG VL0/1/2-Ba53 Bevel Gears, dimensions

Unit	Gear	Unit adaptor flange p/n	Bevel gear p/n		A	øB	øC	øD
			i = 1:1	i = 2:1				
WM40	VL0-Ba53	89 10 92 05 20	03 27 05 00 29	–	65	44	44	12
WM60 / WV60 / WZ60	VL0-Ba53	89 10 92 09 96	03 27 05 00 29	–	65	64,5	64,5	12
WM60 / WV60 / WZ60	VL1-Ba53	89 10 92 00 59	03 27 05 00 23	03 27 05 00 24	90	90	60	18
WM80 / WV80	VL1-Ba53	89 10 92 00 62	03 27 05 00 23	03 27 05 00 24	90	90	60	18
WM120 / WV120	VL2-Ba53	89 10 92 00 65	03 27 05 00 27	03 27 05 00 28	120	120	80	25
MLSM60D	VL1-Ba53	89 10 92 08 62	03 27 05 00 23	03 27 05 00 24	90	90	60	18
MLSM60D	VL2-Ba53	89 10 92 08 70	03 27 05 00 27	03 27 05 00 28	120	120	80	25
MLSM80D	VL2-Ba53	89 10 92 10 20	03 27 05 00 27	03 27 05 00 28	120	120	80	25

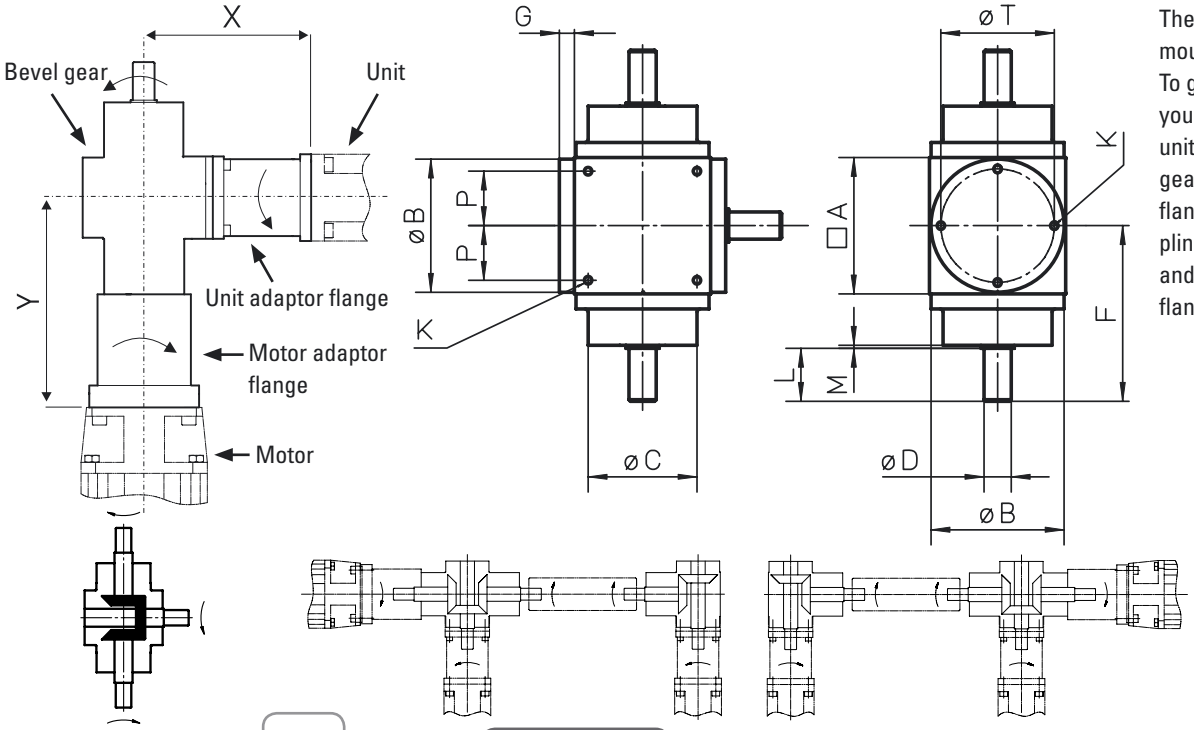

The bevel gear comes mounted from factory. To get a complete gear you must choose correct unit adaptor flange, bevel gear and motor adaptor flange. A matching coupling between the motor and the motor adaptor flange is included.

F	G	K	L	M	P	øT	X	Motor	Motor adaptor flange p/n	Y
100	11,5	M6	26	2	22,5	54	113	DBL3N00300	89 10 92 09 97	143
100	9,5	M6	26	2	22,5	54	121	DBL3N00300	89 10 92 09 97	143
122	12	M8	35	2	35	75	144	DBL4N	89 10 92 00 60	180
								DBL5N	89 10 92 00 79	190
								DBL7N	89 10 92 00 80	200
122	12	M6	35	2	35	75	144	DBL4N	89 10 92 00 60	180
								DBL5N	89 10 92 00 79	190
								DBL7N	89 10 92 00 80	200
162	15	M10	45	2	50	100	185	DBL4N	89 10 92 01 30	222
								DBL5N	89 10 92 00 66	232
								DBL7N	89 10 92 00 72	240
122	12	M8	35	2	35	75	143	DBL4N	89 10 92 00 60	180
								DBL5N	89 10 92 00 79	190
								DBL7N	89 10 92 00 80	200
163	15	M10	45	2	50	100	170	DBL4N	89 10 92 01 30	222
								DBL5N	89 10 92 00 66	232
								DBL7N	89 10 92 00 72	240
163	15	M10	45	2	50	100	170	DBL4N	89 10 92 01 30	222
								DBL5N	89 10 92 00 66	232
								DBL7N	89 10 92 00 72	240

i = gear ratio

KRG VL0/1/2-Ba53 Bevel Gears, data

Gear	Mmax [Nm]		nmax [rpm]	M idle [Nm]	η	J [kgm²]		Weight [kg]	Backlash [arc min]
	i = 1:1	i = 2:1				i = 1:1	i = 2:1		
VL0-Ba53	10	–	3000	0,2	0,97	0,000088	0,000043	2,5	10
VL1-Ba53	28	28	3000	0,3	0,97	0,000396	0,000126	6,5	10
VL2-Ba53	60	60	3000	0,5	0,97	0,001369	0,000288	15	10

i = gear ratio
Mmax = max. input torque
η = effeciency factor
nmax = max. input speed
M idle = idle torque
J = inertia

Accessories

Motors, Gears and Transmission Kits

Micron DT, DTR Planetary Gears, dimensions

Gear	Unit	i	A	□B	C	D	□E	Weight [kg]	Backlash [arc min]	Efficiency [%]
DT60-SS	WH50	3:1 - 10:1	89,7	60	–	–	–	1	8	90
DT60-DS	WH50	15:1 - 100:1	106,9	60	–	–	–	1,2	9	85
DTR60-SS	WH50	5:1 - 50:1	–	–	110,2	104,1	60	2,5	9	90
DTR60-DS	WH50	60:1 - 500:1	–	–	127,3	104,1	60	2,7	9	85
DT90-SS	WH80	3:1 - 10:1	110,9	90	–	–	–	3	9	90
DT90-DS	WH80	15:1 - 100:1	133,5	90	–	–	–	3,7	9	85
DTR90-SS	WH80	5:1 - 50:1	–	–	145,4	138,2	90	4,8	9	90
DTR90-DS	WH80	60:1 - 500:1	–	–	168,0	138,2	90	5,5	9	85
DT115-SS	WH120	3:1 - 10:1	136,4	110	–	–	–	12,7	8	90
DT115-DS	WH120	15:1 - 100:1	167,4	110	–	–	–	16,2	9	85
DTR115-SS	WH120	5:1 - 50:1	–	–	185,7	173,5	115	11	8	90
DTR115-DS	WH120	60:1 - 500:1	–	–	216,7	173,5	115	12	9	85

i = gear ratio

Micron DT and DTR planetary gears comes mounted on the unit from factory.

DT

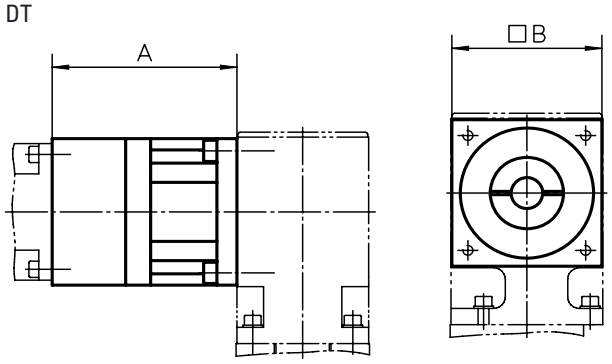

DTR

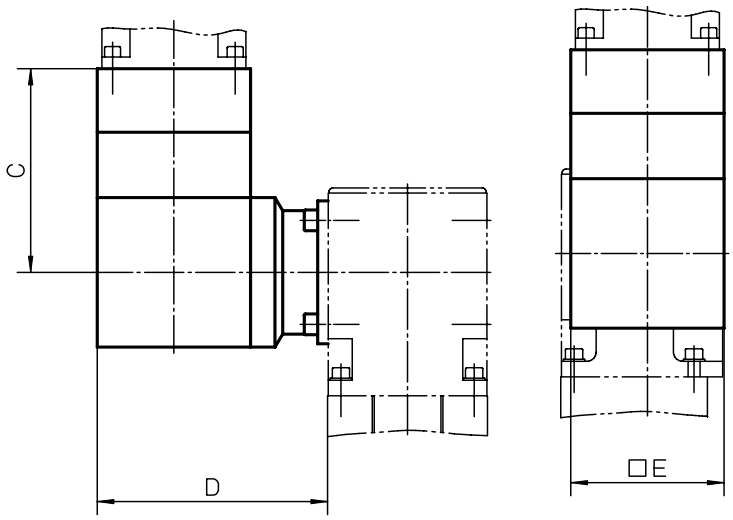

Left side

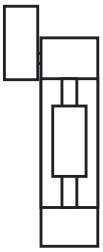

Right side

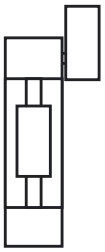

Position 1

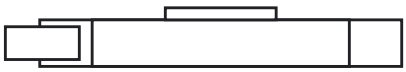

Position 2

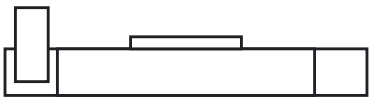

Position 3

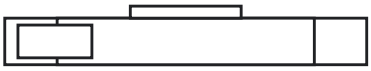

Position 4

Accessories

Motors, Gears and Transmission Kits

Micron DT, DTR Planetary Gears, how to order

When ordering a DT or DTR planetary gear you need to state the size and type of gear, which side of the unit the gear shall be installed, the gear ratio and which motor that you wish to use. For DTR you also must state the prefered mounting position of the gear. With this information we can check if your choice of motor is possible or not and give you the correct ordering code for the gear.

Micron DT, ordering data

1. Size of planetary gear
DT60
DT90
DT115

2. Type of gear
-SS
-DS

3. Mounting side of the unit
Left
Right

4. Gear ratio
3:1 (only for -SS models)
5:1 (only for -SS models)
10:1 (only for -SS models)
15:1 (only for -DS models)
25:1 (only for -DS models)
30:1 (only for -DS models)
50:1 (only for -DS models)
100:1 (only for -DS models)

5. Motor
Specify your choice of motor.

Micron DTR, ordering data

1. Type and size of planetary gear
DTR60
DTR90
DTR115

2. Type of gear
-SS
-DS

3. Mounting position of the gear
Position 1
Position 2
Position 3
Position 4

4. Mounting side of the unitl
Left
Right

5. Gear ratio
5:1 (only for -SS models)
6:1 (only for -SS models)
9:1 (only for -SS models)
10:1 (only for -SS models)
12:1 (only for -SS models)
15:1 (only for -SS models)
20:1 (only for -SS models)
25:1 (only for -SS models)
30:1 (only for -SS models)
40:1 (only for -SS models)
50:1 (only for -SS models)
60:1 (only for -DS models)
75:1 (only for -DS models)
90:1 (only for -DS models)
100:1 (only for -DS models)
120:1 (only for -DS models)
125:1 (only for -DS models)
150:1 (only for -DS models)
200:1 (only for -DS models)
250:1 (only for -DS models)
300:1 (only for -DS models)
400:1 (only for -DS models)
500:1 (only for -DS models)

6. Motor
Specify your choice of motor.

Accessories

Motors, Gears and Transmission Kits

VWZ Intermediate Shafts, dimensions

Shaft	øA	B	C	D	øE	F min.	G
VWZ-30	32	15	1,5	34	30	99	M4
VWZ-40	42	17	1,5	46	40	133	M5
VWZ-60	56	30	2	63	60	177	M6
VWZ-60V	67	35	2	73	60	205	M8
VWZ-80	82	40	2	84	80	249	M10
VWZ-100	102	50	2	97	100	283	M12

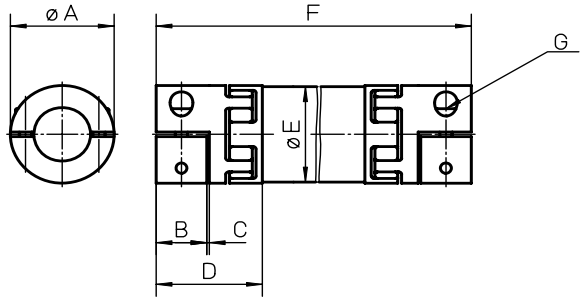

The VWZ intermediate shafts can be installed in two ways. Either directly to belt driven units (I) or to screw driven units using KRG bevel gears (II) of type VL0, VL1 or VL2. The intermediate shaft includes tube and couplings.

I

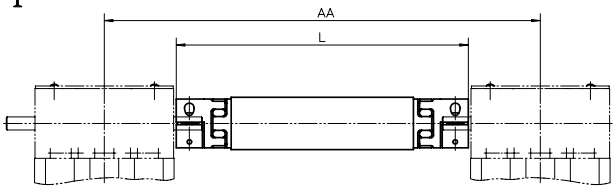

II

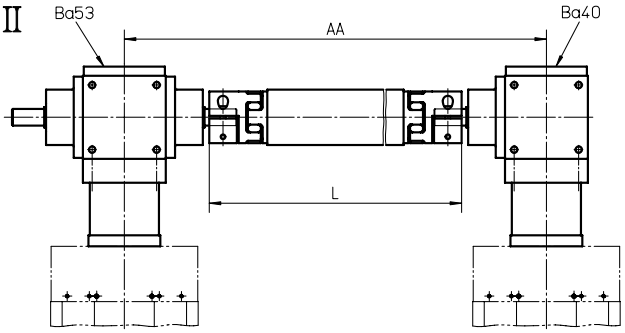

Critical Speed of Shaft

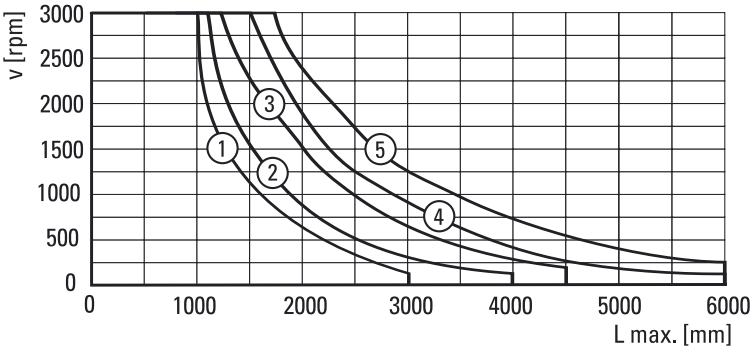

1: VWZ-30
2: VWZ-40
3: VWZ-60 and VWZ-60V
4: VWZ-80
5: VWZ-100

VWZ Intermediate Shafts, data

Shaft	Mmax [Nm]	Gs [kg/m]	Gc [kg]	Js [kgm²/m]	Jc [kgm²]	Ms [Nm]
VWZ-30	4,8	0,58	0,14	0,00011	0,00001	4
VWZ-40	6,4	0,76	0,36	0,00020	0,00008	8
VWZ-60	22,7	0,97	0,94	0,00080	0,00024	15
VWZ-60V	60,6	0,97	1,42	0,00080	0,00046	35
VWZ-80	122,7	2,00	2,98	0,00300	0,00240	70
VWZ-100	169,7	2,47	4,62	0,00580	0,00600	120

Mmax = max. shaft torque
Gs = weight of shaft
Gc = weight of coupling
Js = inertia of shaft
Jc = inertia of coupling
Ms = tightening torque

Accessories

Motors, Gears and Transmission Kits

VWZ Intermediate Shafts, compatability table

Unit	I	I I	VWZ-30	VWZ-40	VWZ-60	VWZ-60V	VWZ-80	VWZ-100	AA [mm]
WH40	•			•					AA = L + 56
WH50 / WHZ50	•				•				AA = L + 54
WH80 / WHZ80	•					•			AA = L + 84
WH120	•							•	AA = L + 124
MLSH60Z	•					•			AA = L + 164
WB40 / WM40		VL0	•						AA = L + 170
WM60 / WV60 / WZ60		VL1			•				AA = L + 184
WM80 / WV80 / MLSM60D		VL1				•			AA = L + 176
MLSH80Z / MLSM80Z	•						•		AA = L + 244
WM120 / WV120 / MLSM60D / MLSM80D		VL2					•		AA = L + 244

AA = C/C distance between units
L = total length of shaft and coupling assembly

VWZ Intermediate Shafts, ordering key

	1	2	3
Example	VWZ-060	-02	-0700

1. Intermediate shaft size
VWZ-030 = VWZ-30
VWZ-040 = VWZ-40
VWZ-060 = VWZ-60
VWZ-06V = VWZ-60V
VWZ-080 = VWZ-80
VWZ-100 = VWZ-100

2. Type of unit and type of mounting
-01 = WH40 for type I mounting
-02 = WH50 / WHZ50 for type I mounting
-04 = WH80 / WHZ80 for type I mounting
-05 = WH120 for type I mounting
-07 = MLSH60Z for type I mounting
-08 = WB40 / WM40 for type II mounting on VLO gears
-10 = WM60 / WV60 / WZ60 for type II mounting on VL1 gears
-11 = WM80 / WV80 / MLSM60D for type II mounting on VL1 gears
-12 = MLSH80Z / MLSM80Z for type I mounting
-13 = WM120 / WV120 / MLSM60D / MLSM80D for type II mounting on VL2 gears

3. C/C distance between units (AA)
- • • • • = distance in mm

Accessories

Motors, Gears and Transmission Kits

DSP Intermediate Shafts, data

Shaft	Weight of shaft [kg]	Max. speed [rpm]	Shaft diameter [mm]
DSP-05B	0,3 + 1,3 × Lm	1500	20
DSP-06B	0,3 + 1,3 × Lm	1500	20
DSP-07B	0,6 + 2,6 × Lm	1500	30
DSP-10B	0,6 + 2,6 × Lm	1500	30
DSB--ZB	0,6 + 2,6 × Lm	1500	30
DSP-TBS	0,6 + 2,6 × Lm	1500	30

Lm = C/C distance between units in cm

The DSP intermediate shaft can be installed directly between two belt driven units or between two screw driven units using a TBS worm gear. Couplings and tube is included in the shipment. Support bearings may need to be installed if the critical speed of the shaft is exceeded. See diagram. Support bearings can be ordered from your local bearing supplier.

DSP-05B/06B/07B/10B/-ZB

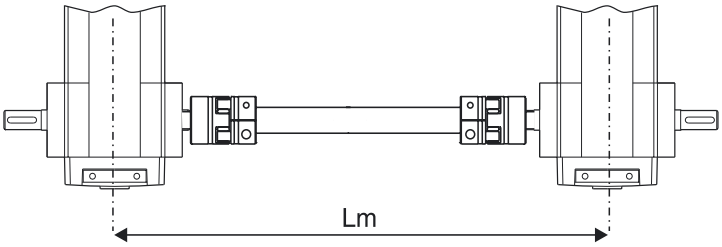

DSP-TBS

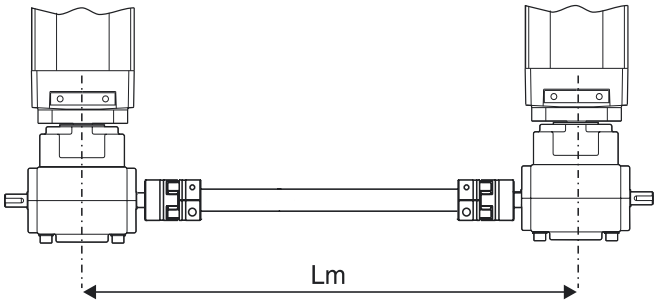

Critical Speed of Shaft

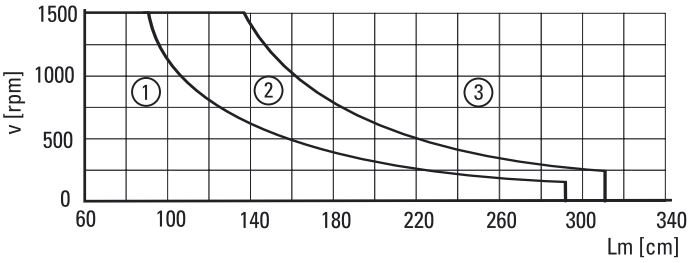

1: No support bearing required
2: Support bearing required for DSP-05B and DSP-06B
3: Support bearing always required

Accessories

Motors, Gears and Transmission Kits

DSP Intermediate Shafts, compatability table

Unit	Drive type	DSP-05B	DSP-06B	DSP-07B	DSP-10B	DSP--ZB	DSP-TBS
M50	belt	•					
M55	belt		•				
M75	belt			•			
M100	belt				•		
ZB	belt					•	
M55	screw						•
M75	screw						•
M100	screw						•

DSP Intermediate Shafts, ordering key

	1	2
Example	DSP-06B	-305

1. Intermediate shaft size and type
DSP-05B = for belt driven M50 units
DSP-06B = for belt driven M55 units
DSP-07B = for belt driven M75 units
DSP-10B = for belt driven M100 units
DSP--ZB = for belt driven ZB units
DSP-TBS = for screw driven M55, M75 or M100 units with TBS worm gear

2. C/C distance between units in cm (Lm)
-• • • = lenght in cm

Accessories

Motors, Gears and Transmission Kits

AKM Servo Motor with brake, dimensions

Motor	p/n	øA	øC	øD	□E	F	øG	K	L
AKM23D-AN	See ordering data in motor catalogue	40	63	9	58	90	4,8	124,2	20
AKM32D-AN		60	75	14	70	109	5,8	140,8	30
AKM42D-AN		80	100	19	84	123	7	147,8	40
AKM43D-AN		80	100	19	84	123	7	176,8	40
AKM52D-AN		110	130	24	108	147	9	158,5	50
AKM53D-AN		110	130	24	108	147	9	189,5	50
AKM63D-AN		130	165	32	138	177	11	178,7	58
AKM64D-AN		130	165	32	138	177	11	203,7	58
AKM72D-AN		180	215	38	188	227	13,5	192,5	80
AKM74D-AN		180	215	38	188	227	13,5	226,5	80

AKM Servo Motor with brake, data

Motor	Mo [Nm]	Mn [Nm]	Io [A]	Jmot [kgm²]	Gmot [kg]	Mbr [Nm]	Ibr [A]	Jbr [kgm²]	Gbr [kg]
AKM23D-AN	1,16	0,92	2,19	0,000022	1,38	1,42	0,35	0,0000011	0,27
AKM32D-AN	2,04	1,65	2,23	0,000059	2,23	2,5	0,42	0,0000011	0,35
AKM42D-AN	3,42	2,81	2,74	0,00015	3,39	6	0,54	0,0000068	0,63
AKM43D-AN	4,8	3,01	4,87	0,00021	4,35	6	0,54	0,0000068	0,63
AKM52D-AN	8,6	3,9	9,3	0,00062	5,8	14,5	0,81	0,0000173	1,1
AKM53D-AN	11,6	7,65	9,4	0,00091	7,4	14,5	0,81	0,0000173	1,1
AKM63D-AN	16,8	14,9	9,9	0,0024	11,1	25	1,07	0,000061	2
AKM64D-AN	21	15,6	12,8	0,0032	13,3	25	1,07	0,000061	2
AKM72D-AN	29,4	20,1	18,7	0,0065	19,7	53	1,48	0,000164	2,1
AKM74D-AN	41,6	28,5	19,5	0,0092	26,7	53	1,48	0,000164	2,1

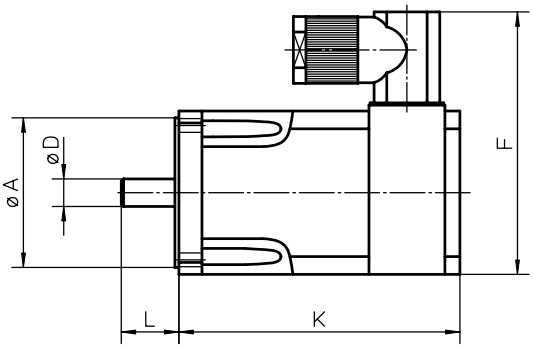

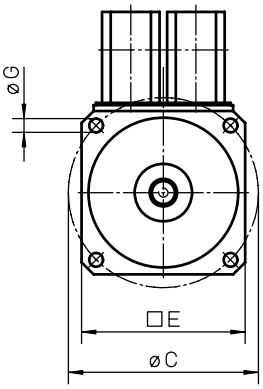

Mo = standstill torque
Mn = nominal torque
Io = standstill current
Jmot = rotor inertia
Gmot = weight of motor
Mbr = brake torque
Ibr = brake current
Jbr = brake inertia
Gbr = weight of brake

Accessories

Motors, Gears and Transmission Kits

DBL Servo Motor, dimensions

Motor	p/n	øA	B	øC	øD	□E	F	øG	H	K without brake	K with brake	L
DBL2H00040	See ordering data in motor catalogue	40	2,5	63	9	55	65	5,8	80	142	175	20
DBL3H00130		60	2,5	90	11	75	70	5,8	80	157	190	23
DBL3M00190		60	2,5	90	11	75	70	5,8	80	175	208	23
DBL3N00300		60	2,5	90	14	75	70	5,8	80	218	251	30
DBL4N00530		95	3	115	19	105	81	9	80	225	257	40
DBL4N00750		95	3	115	19	105	81	9	80	270	302	40
DBL5N01050		130	3,5	165	24	142	83	11	80	270	313	50
DBL5N01700		130	3,5	165	24	142	83	11	80	321	364	50
DBL6N02200		180	3,5	215	24	190	95	12	80	293	339	50
DBL7N03200		180	4	215	32	190	–	14	–	321	365	58

DBL Servo Motor, data

Motor	Mo [Nm]	Mn [Nm]	Io [A]	Jmot [kgm²]	Gmot [kg]	Mbr [Nm]	Ibr [A]	Jbr [kgm²]	Gbr [kg]
DBL2H00040	0,4	0,34	0,93	0,000008	1,1	1,2	0,36	0,000007	0,3
DBL3H00130	1,3	1,1	1,75	0,00008	2,3	2,5	0,6	0,000038	0,4
DBL3M00190	1,9	1,6	1,5	0,0001	2,5	2,5	0,6	0,000038	0,4
DBL3N00300	3	2,6	2,1	0,00017	4	2,5	0,6	0,000038	0,4
DBL4N00530	5,3	4,6	3,2	0,00028	5,7	5	0,7	0,000106	0,8
DBL4N00750	7,5	6,5	4,1	0,00043	7,6	5	0,7	0,000106	0,8
DBL5N01050	10,5	8,5	6,5	0,00081	9,8	12	0,8	0,00036	1,5
DBL5N01700	17	14	10,4	0,00113	14	12	0,8	0,00036	1,5
DBL6N02200	22	16	15,1	0,00251	21,5	20	0,95	0,00095	2,8
DBL7N03200	32	23	20	0,01141	32,5	20	0,95	0,00095	3,3

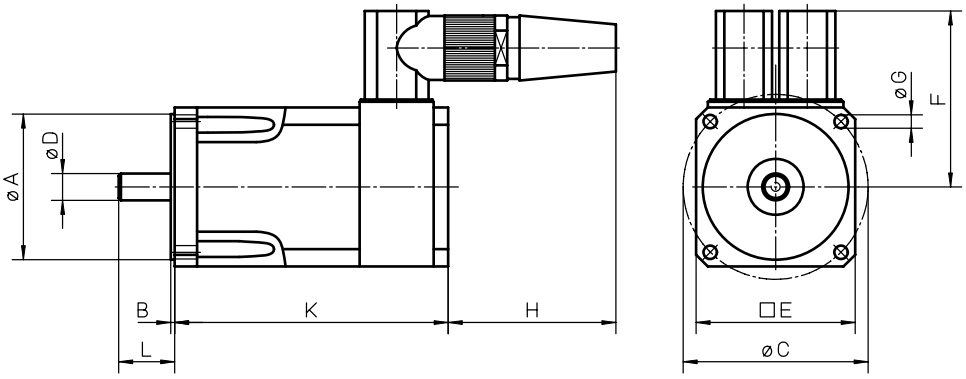

Mo = standstill torque
Mn = nominal torque
Io = standstill current
Jmot = rotor inertia
Gmot = weight of motor
Mbr = brake torque
Ibr = brake current
Jbr = brake inertia
Gbr = weight of brake

Accessories

Electrical Feedback Devices

Limit Switch Brackets[1]

Unit type	I	For limit switch type	I I	For limit switch type
M50	D393 035	XCM-A115	–	–
M55	D313 427	XCK-M115	D313 428	XCK-M115
M75	D312 860	XCK-M115	D312 861	XCK-M115
M100	D312 330	XCK-M115	D312 331	XCK-M115

[1] no limit switches included in the shipment.

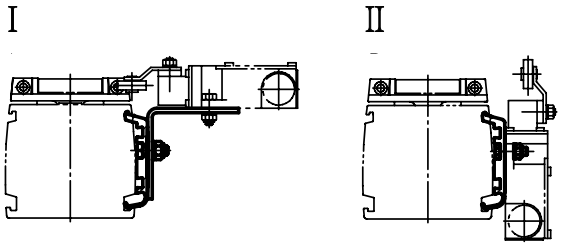

Limit Switch Brackets for Z3

Unit type	p/n	For limit switch type
Z3	D800 042	XCK-M115

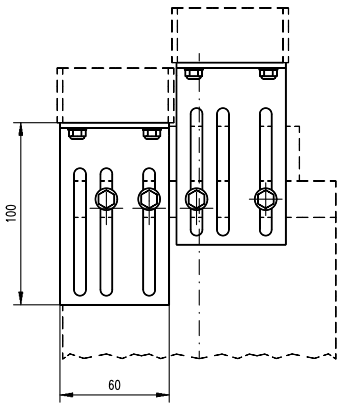

The limit switch brackets are adjustable in height. The limit switches on the brackets are operated by the maximum extended and maximum retracted end of stroke bars on top of the Z3 units. Two brackets are required.

Limit Switches

Switch type	p/n	Protection degree	Contacts	Cable
XCM-A115	D535 102	IP67	NO + NC	1 meter
XCK-M115	D535 107	IP67	NO + NC	–

Accessories

Electrical Feedback Devices

Sensor Brackets for Cylindrical Sensors[1]

Unit type	I	For sensor diameter	I I	For sensor diameter
M55	D313 429	12	D313 430	12
M75	D312 862	18	D312 863	18
M100	D312 332	18	D312 333	18

[1] no sensors included in the shipment

I

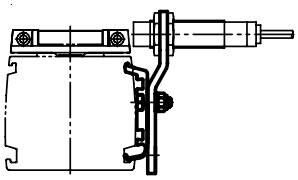

II

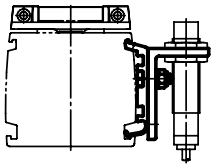

Accessories

Electrical Feedback Devices

ES Limit Switch Option Kit

Unit type	I	II	III	A	B	C	D	E	F	G
WH50 [1]	•			34	60,5	10	26	49	58,5	196
WH80	•			31	76	10	39	49	78,5	196
WH120	•			34	88	10	51	49	78,5	196
WHZ50	•			34	61	10	26	49	58,5	196
WHZ80	•			31	76	10	39	49	78,5	196
WM60		•		40	69	32	38	50	63	200
WM80		•		40	73	32	42	50	79	200
WM120		•		40	89	32	58	50	94	200
WV60		•		40	69	32	38	50	33	200
WV80		•		40	73	32	42	50	39	200
WV120		•		40	89	32	58	50	59	200
MLSM60D		•		40	73	32	32	50	79	200
MLSH60Z	•			40	73	32	42	50	79	200
MLSM80D		•		40	85	32	54	50	101	200
MLSH80Z	•			40	85	32	54	50	101	200
MLSM80Z		•		40	85	32	54	50	101	200
WZ60 [1]			•	60	22,5	16	30	113	53	–
WZ80 [1]			•	60	22,5	16	30	112	84	–

[1] limit switches for these units can not be moved. On all other units the switches can be re-positioned by the customer.

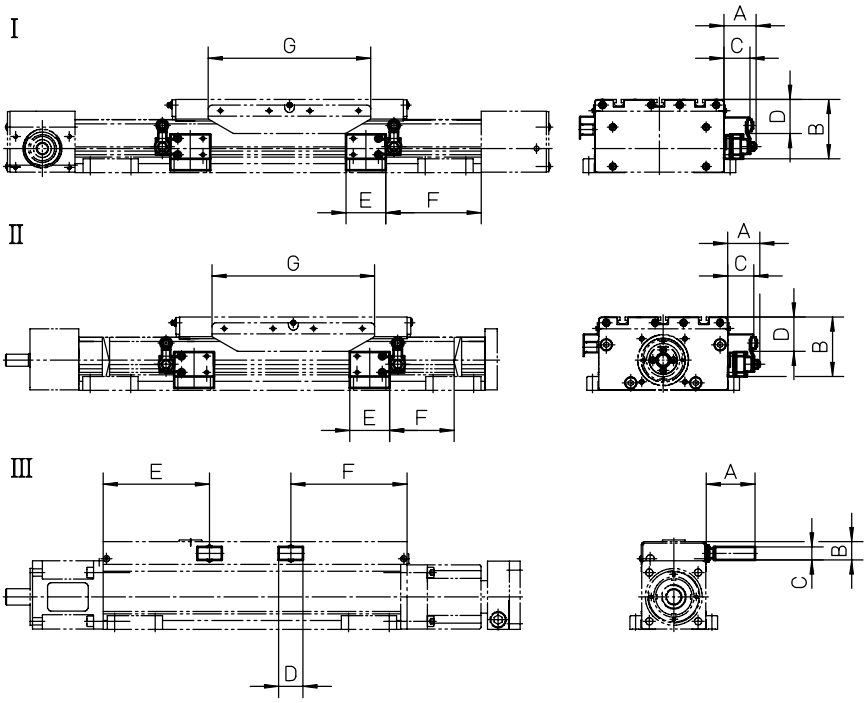

The ES limit switch assembly is an option that is mounted at the factory. The limit switches are placed 10 mm from the mechanical ends of the unit. Each limit switch has one NO and one NC contact with positive opening action. Protection degree is IP67. Type I and II switches can be repositioned along the profile by the customer. Note! the ES limit switch option and any of the sensor rail options ENT14x16, ENF14x16 or ENK can not be mounted on the same side of the unit.

Accessories

Electrical Feedback Devices

ES Limit Switch Option Kit, ordering key

	1	2	3	4
Example	ESK07	-L	-01	-10

1. Compatable unit
ESK02 = WH50
ESK03 = WH80
ESK04 = WH120
ESK05 = WM40
ESK06 = WM60
ESK07 = WM80
ESK08 = WM120
ESK09 = WV60
ESK10 = WV80
ESK11 = WV120
ESK12 = WHZ50
ESK13 = WHZ80
ESK14 = WZ60
ESK15 = WZ80
ESK16 = MLSH60Z
ESK17 = MLSH80Z
ESK18 = MLSM80Z
ESK19 = MLSM60D
ESK20 = MLSM80D

2. Mounting side of the unit
-L = left side
-R = right side

3. Switch configuration on side A
-00 = no switch on side A
-01 = switch with 1 m cable
-05 = switch with 5 m cable
-10 = switch with 10 m cable

4. Switch configuration on side B
-00 = no switch on side B
-01 = switch with 1 m cable
-05 = switch with 5 m cable
-10 = switch with 10 m cable

ES-••-R-••-••

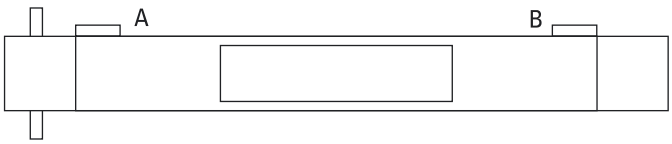

ES-••-L-••-••

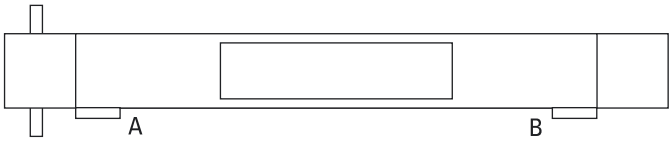

Accessories

Electrical Feedback Devices

ENT14x16 Inductive Sensor Rail

Unit type	p/n
WH40 / WH50 / WH80 / WH120 / WHZ50 / WHZ80 / WM40 / WM60 / WM80 / WV60 / WV80 / MLSM60D / MLSM80D / MLSH60Z / MLSH80Z / MLSM80Z	671 545 0283

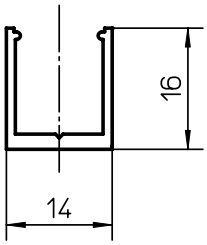

The ENT14x16 inductive sensor rail is mounted to the side of an unit or along any type of beam or profile. In the rail inductive sensors of type EN2 can be mounted. The rail can also serve as a cable duct for the sensor cables. The rail is sealed with a cover which comes with the rail. The rail comes in lenghts of max. 3000 mm. Drilling in the profile of the unit is required when mounting the rail. When ordering, specify part number and lenght of the rail. Note1! WM120 and WV120 units do not require any rail as the EN2 sensors can be fitted directly to the profile of the units. Note2! ES limit switch option and ENT14x16 rail can not be mounted on the same side of the unit.

ENF and ENK Inductive Sensor Rail Option Kit, compatability table

Unit type	ENF / ENK
WH40 / WH50 / WH80 / WH120 / WHZ50 / WHZ80 / WM40 / WM60 / WM80 / WV60 / WV80 / MLSM60D / MLSM80D / MLSH60Z / MLSH80Z / MLSM80Z	•

ENF

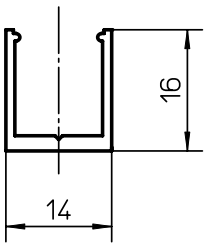

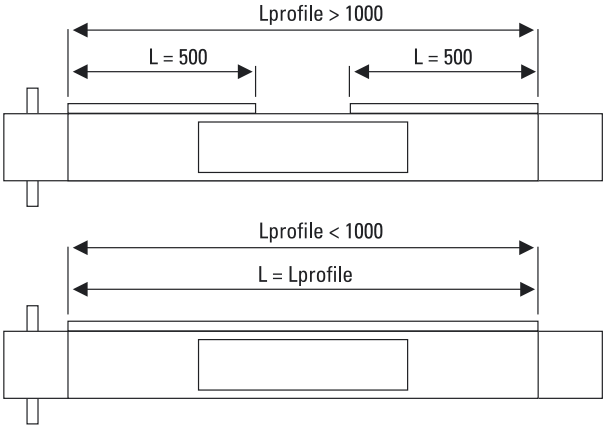

ENK

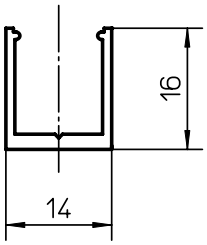

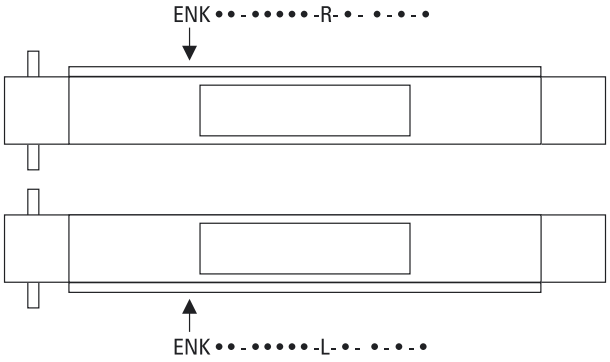

The ENF and ENK inductive sensor rail option kits are mounted at the factory. The ENF option consists of two 500 mm long ENT14x16 sensor rails mounted on in each end of the unit on the left or right side of the profile. In cases where the unit is to short to allow two 500 mm sensor rails to be mounted, then one rail is mounted along the entire profile of the unit. The ENK option also consists of ENT14x16 sensor rails but the ENK option has sensor profiles that runs along the entire profile of the unit. In the shipment of both ENF and ENK the specified amount and type of EN2 sensors are included. The sensors are fitted to the sensor rail by the customer at the desired positions. Note1! WM120 and WV120 units do not require any ENF or ENF option as the EN2 sensors can be fitted directly to the profile of the units. Note2! ES limit switch option and ENF rail can not be mounted on the same side of the unit.

Accessories

Electrical Feedback Devices

ENK and ENF Inductive Sensor Rail Option Kit, ordering key

	1	2	3	4	5	6	7	8
Example	ENK16	-S	-04000	-R	-2	-0	-1	-6

1. Type of rail and compatable unit

ENK01 = ENK rail for WH40
ENK02 = ENK rail for WH50
ENK03 = ENK rail for WH80
ENK04 = ENK rail for WH120
ENK05 = ENK rail for WM40
ENK06 = ENK rail for WM60 / WV60
ENK07 = ENK rail for WM80 / WV80
ENK08 = ENK rail for WM120 / WV120
ENK11 = ENK rail for WHZ50
ENK12 = ENK rail for WHZ80
ENK15 = ENK rail for MLSH60Z
ENK16 = ENK rail for MLSH80Z
ENK17 = ENK rail for MLSM80Z
ENK18 = ENK rail for MLSM60D
ENK19 = ENK rail for MLSM80D
ENK20 = ENK rail for WB40

ENF01 = ENF rail for WH40
ENF02 = ENF rail for WH50
ENF03 = ENF rail for WH80
ENF04 = ENF rail for WH120
ENF05 = ENF rail for WM40
ENF06 = ENF rail for WM60 / WV60
ENF07 = ENF rail for WM80 / WV80
ENF08 = ENF rail for WM120 / WV120
ENF11 = ENF rail for WHZ50
ENF12= ENF rail for WHZ80
ENF15 = ENF rail for MLSH60Z
ENF16 = ENF rail for MLSH80Z
ENF17 = ENF rail for MLSM80Z
ENF18 = ENF rail for MLSM60D
ENF19 = ENF rail for MLSM80D
ENF20 = ENF rail for WB40

2. Number of carriages

-S = singel carriage
-D = double carriages

3. Total length of unit (L tot)

- • • • • • = distance in mm

4. Mounting side of the unit

-L = left side
-R = right side

5. Number of EN2 sensors with NO contact and 2 m cable

- • = 0 – 9 sensors / normally open / 2 m cable

6. Number of EN2 sensors with NC contact and 2 m cable

- • = 0 – 9 sensors / normally close / 2 m cable

7. **Number of EN2 sensors with N0 contact and 10 m cable**

- • = 0 – 9 sensors / normally open / 10 m cable

8. **Number of EN2 sensors with NC contact and 10 m cable**

- • = 0 – 9 sensors / normally close / 10 m cable

Accessories

Electrical Feedback Devices

EN2 Inductive Sensors, data

Parameter		EN2
Supply voltage	[Vdc]	10 – 30
Max. load current	[A]	0,2
Operating distance	[mm)	2
LED indicator for switch		yes
Protection class		IP67
Cable type		screened
Weight with cable L = 2 m with cable L= 10 m	[kg]	 0,04 0,19

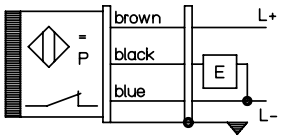

EN2 Inductive Sensors, part numbers

Sensor type	Cable length [m]	p/n
Normally closed	2	671 545 0305
Normally open	2	671 545 0304
Normally closed	10	671 545 0307
Normally open	10	671 545 0306

To be able to mount the EN2 inductive sensors on a unit the ENT14x16 sensor rail is required except for units WM120 and WV120 where they can be fitted directly to the profile of the unit.

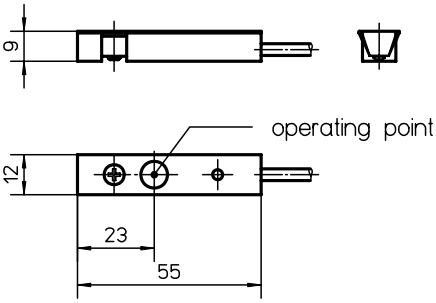

Magnetic Sensors, data

Parameter		
Max. power	[W]	10
Max. voltage	[Vdc]	100
Max. current	[A]	0,5
LED indicator for switch		no
Protection class		IP67
Cable lenght	[m]	3
Cable cross section	[mm²]	2 × 0,15
Operating temperature limits	[°C]	-25 – 65
Weight	[kg]	0,050

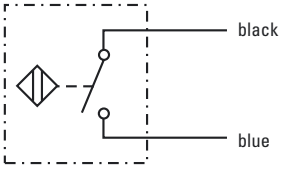

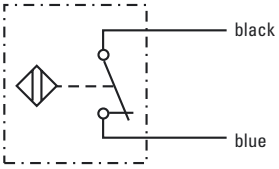

Magnetic Sensors, part numbers

Sensor type	suitable units	p/n
Normally closed	M50, T90, T130	D535 071
Normally open	M50, T90, T130	D535 070

The magnetic sensors are mounted directly in the sensor slot of the profiles of the units and require no mounting bracket. The sensor is fixed in position by two M3 size locking screws (A1). The cable (A2) is molded into the sensor.

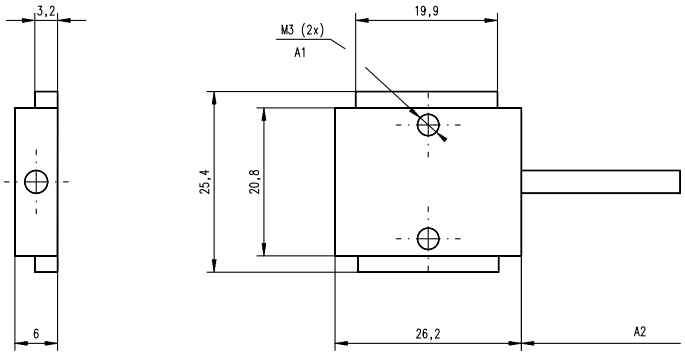

Accessories

Electrical Feedback Devices

IG602 Encoders, data

Parameter		IG602
Supply voltage Type 1 Type 2	[Vdc]	 5 ±10% 10 – 30
Output type Type 1 Type 2		 line driver push-pull
Pulses per revolution Type 1 Type 2	[ppr]	 100 – 2500 100 – 600
Length (L) Type 1 Type 2	[mm]	 51,5 56,0
Weight Type 1 Type 2	[kg]	 0,36 0,36

The IG602 encoders comes with mounting screws but no coupling or connector. To be able to mount the encoder to the unit the unit must have a shaft for encoders. See the ordering keys of the units. The encoders can also be ordered mounted to the unit from factory. See ADG encoder option kit.

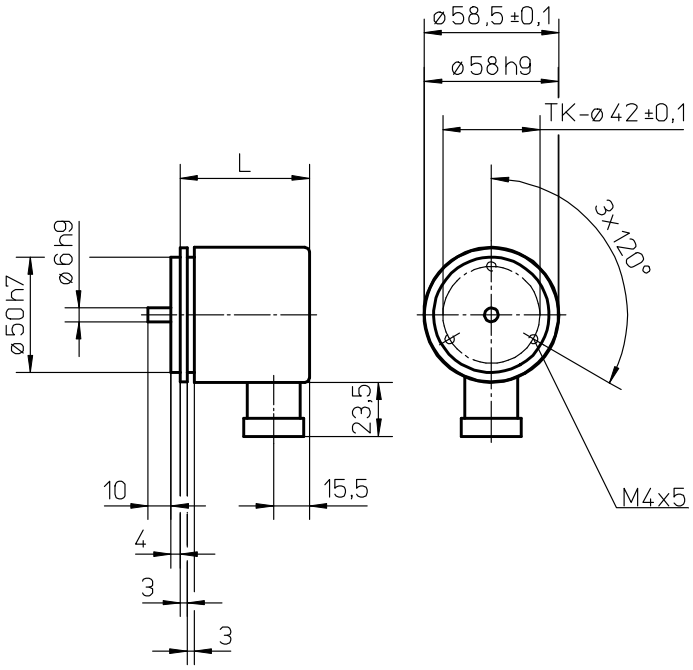

IG602 Encoders, part numbers

Encoder type	Supply voltage [Vdc]	Pulses per revolution	p/n
Type 1	5	100	671 521 0194
Type 1	5	200	671 521 0195
Type 1	5	500	671 521 0196
Type 1	5	600	671 521 0197
Type 1	5	1000	671 521 0198
Type 1	5	1250	671 521 0199
Type 1	5	1500	671 521 0200
Type 1	5	2000	671 521 0192
Type 1	5	2500	671 521 0201
Type 2	10 – 30	100	671 521 0193
Type 2	10 – 30	200	671 521 0202
Type 2	10 – 30	500	671 521 0203
Type 2	10 – 30	600	671 521 0204

STE001 Encoder Connector, data

Parameter		STE001
Number of poles		12
Protection class		IP67
Execution		jack
Cable entrance		straight
Weight	[kg]	0,04
Part number		6715600153

Encoder Cable, data

Parameter	p/n
5 m cable length	671 555 0068
10 m cable length	671 555 0069

The encoder cables come fitted with a STE001 encoder connector in one of the ends.

Accessories

Electrical Feedback Devices

ADG Encoder Option Kit

Unit type	Mounting type I	Mounting type II	A	B	øC	D
WH40	•		115	95	58,5	ø60
WH50 / WHZ50	•		120	96	58,5	50 × 50
WH80 / WHZ80	•		139	100	58,5	90 × 90
WH120	•		153	93	58,5	100 × 100
WM40		•	25	95	58,5	–
WM60		•	31	95	58,5	–
WM80		•	40	95	58,5	–
WM120		•	74	95	58,5	–
WB40		•	20,8	95	58,5	–
MLSM60D		•	37	95	58,5	–
MLSM80D		•	46	95	58,5	–
MLSH60Z	•		174,5	95	58,5	78 × 59
MLSH80Z	•		214,5	95	58,5	100 × 80
MLSM80Z	•		214,5	95	58,5	100 × 80

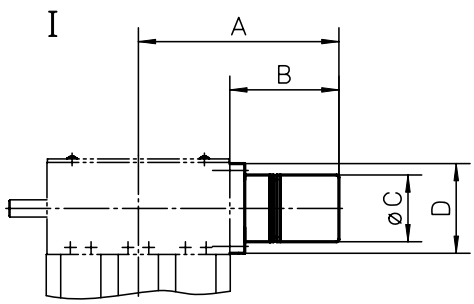

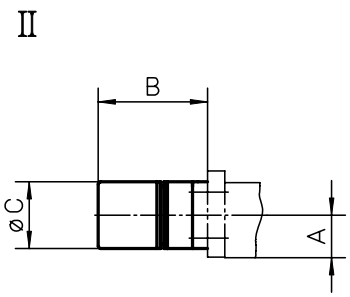

The ADG encoder option kit is an option that is mounted to the unit at the factory. It includes an IG602 encoder, a STE001 encoder connector and an encoder mounting flange with coupling. Cable can also be supplied in 5 or 10 meter length.

Accessories

Electrical Feedback Devices

ADG Encoder Option Kit, ordering key

	1	2	3
Example	ADG-08	-05-0600	-00

1. Compatable unit
ADG-01 = WH40
ADG-02 = WH50 / WHZ50
ADG-03 = WH80 / WHZ80
ADG-04 = WH120
ADG-05 = WM40
ADG-06 = WM60 / WV60
ADG-07 = WM80 / WV80
ADG-08 = WM120 / WV120
ADG-11 = MLSH60Z
ADG-12 = MLSH80Z
ADG-13 = MLSM80Z
ADG-14 = MLSM60D
ADG-15 = MLSM80D
ADG-16 = WB40

2. Supply voltage and number of pulses
-05-0100 = 5 volts, 100 pulses per revolution
-05-0200 = 5 volts, 200 pulses per revolution
-05-0500 = 5 volts, 500 pulses per revolution
-05-0600 = 5 volts, 600 pulses per revolution
-05-1000 = 5 volts, 1000 pulses per revolution
-05-1250 = 5 volts, 1250 pulses per revolution
-05-2000 = 5 volts, 2000 pulses per revolution
-05-2500 = 5 volts, 2500 pulses per revolution
-24-0100 = 10 - 30 volts, 100 pulses per revolution
-24-0200 = 10 - 30 volts, 200 pulses per revolution
-24-0500 = 10 - 30 volts, 500 pulses per revolution
-24-0600 = 10 - 30 volts, 600 pulses per revolution

3. Cable and connector configuation
-00 = no cable only STE001 encoder connector
-05 = 5 m cable with STE001 encoder connector in one of the ends
-10 = 10 m cable with STE001 encoder connector in one of the ends

Accessories

Undriven Units

WH40N

» Ordering key - see page 209
» Technical data - see page 66

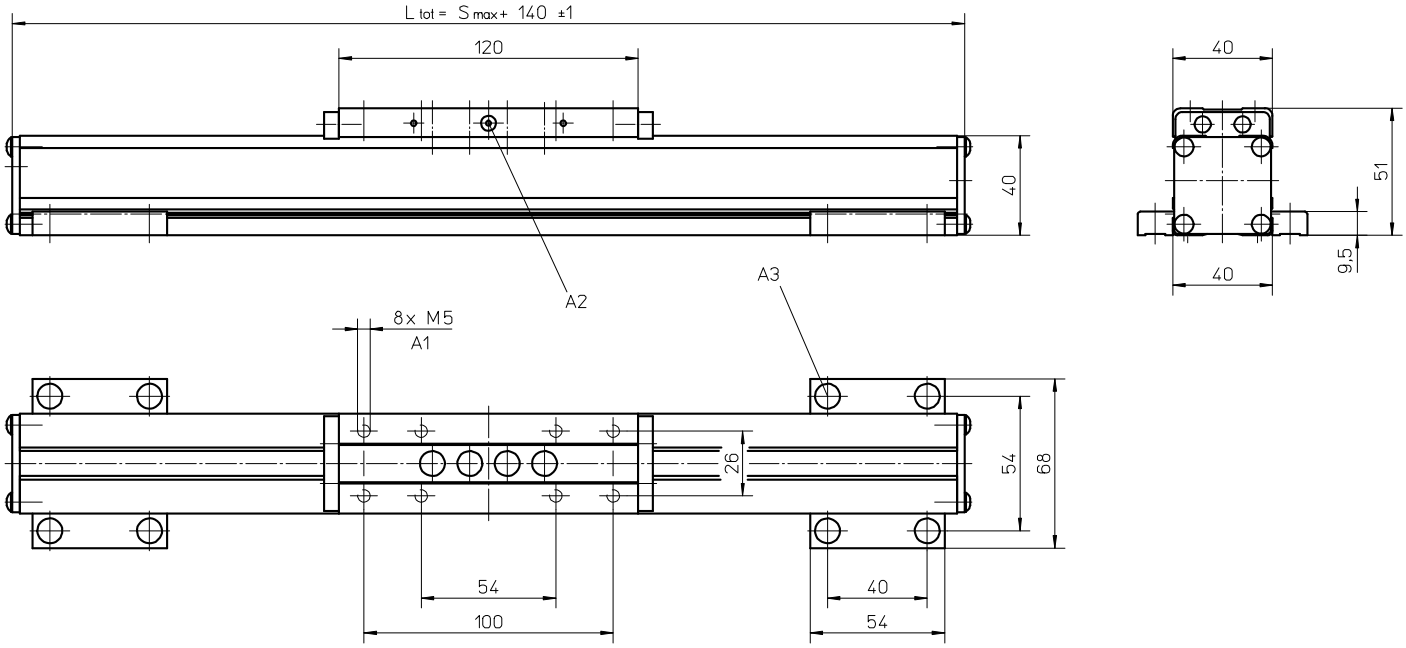

A1: depth 10
A2: lubricating nipple on both sides DIN3405 D 1/A

A3: socket cap screw ISO4762-M5×12 8.8

WH50N

» Ordering key - see page 209
» Technical data - see page 92

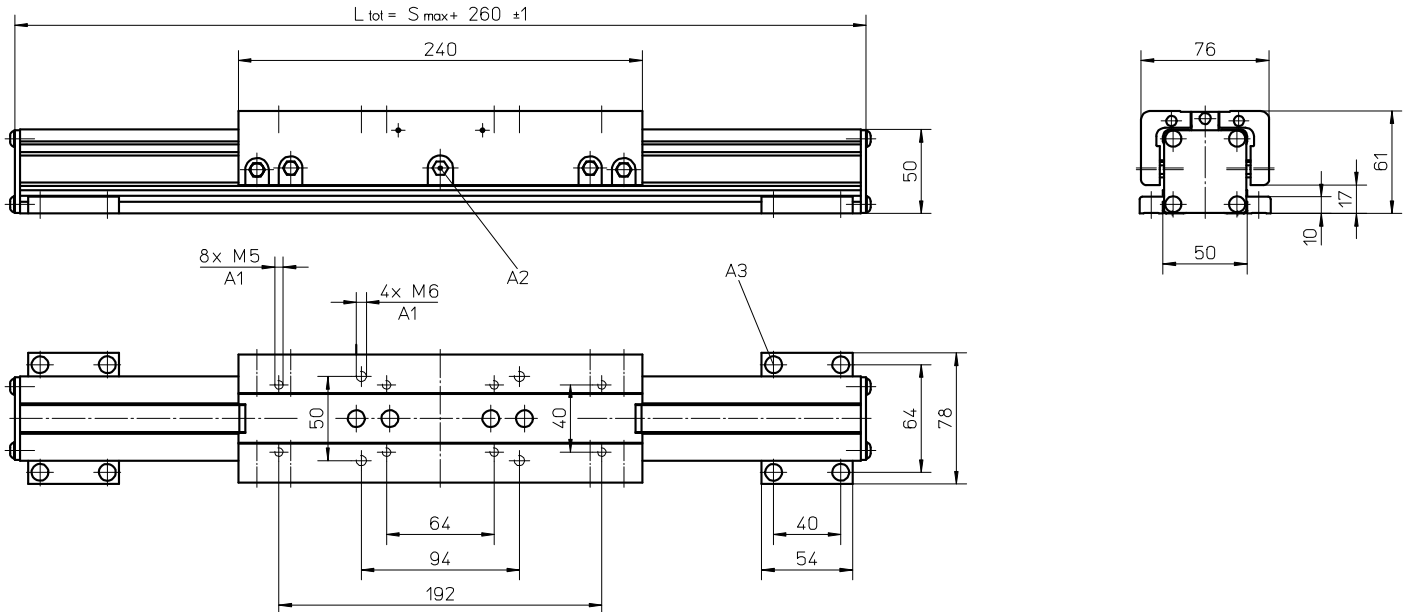

A1: depth 10
A2: funnel type lubricating nipple DIN3405-M6×1-D1

A3: socket cap screw ISO4762-M5×12 8.8

Accessories

Undriven Units

WH80N

» Ordering key - see page 209
» Technical data - see page 94

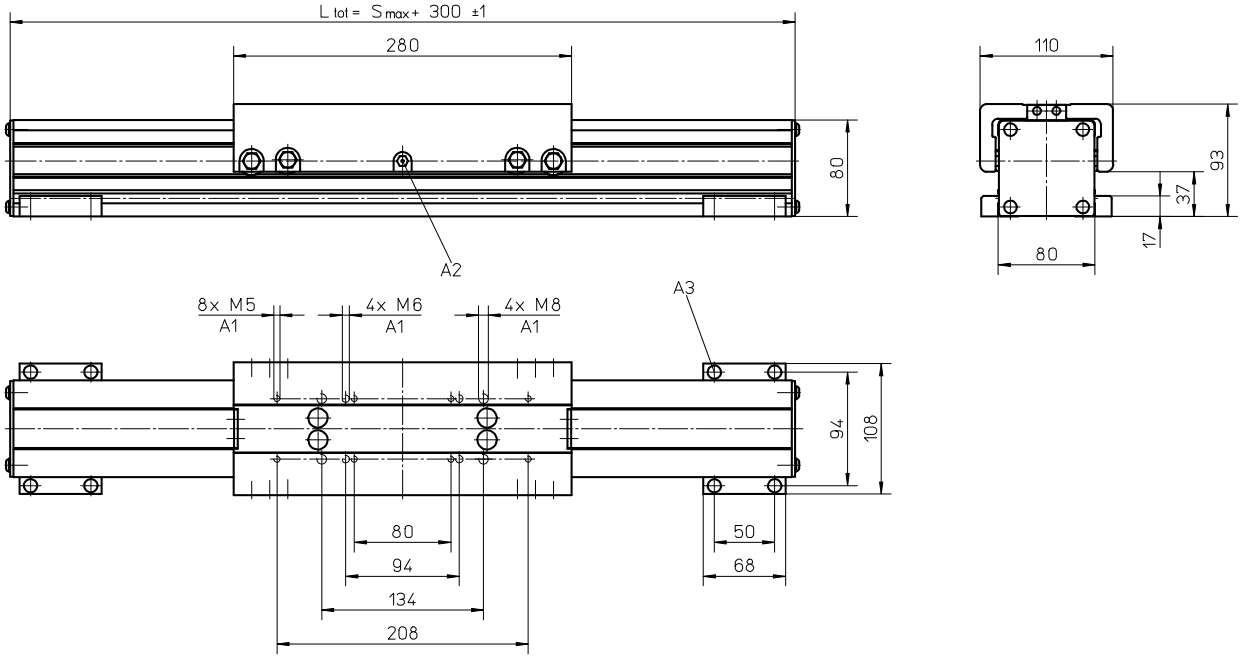

A1: depth 12
A2: funnel type lubricating nipple DIN3405-M6×1-D1

A3: socket cap screw ISO4762-M6×20 8.8

WH120N

» Ordering key - see page 209
» Technical data - see page 96

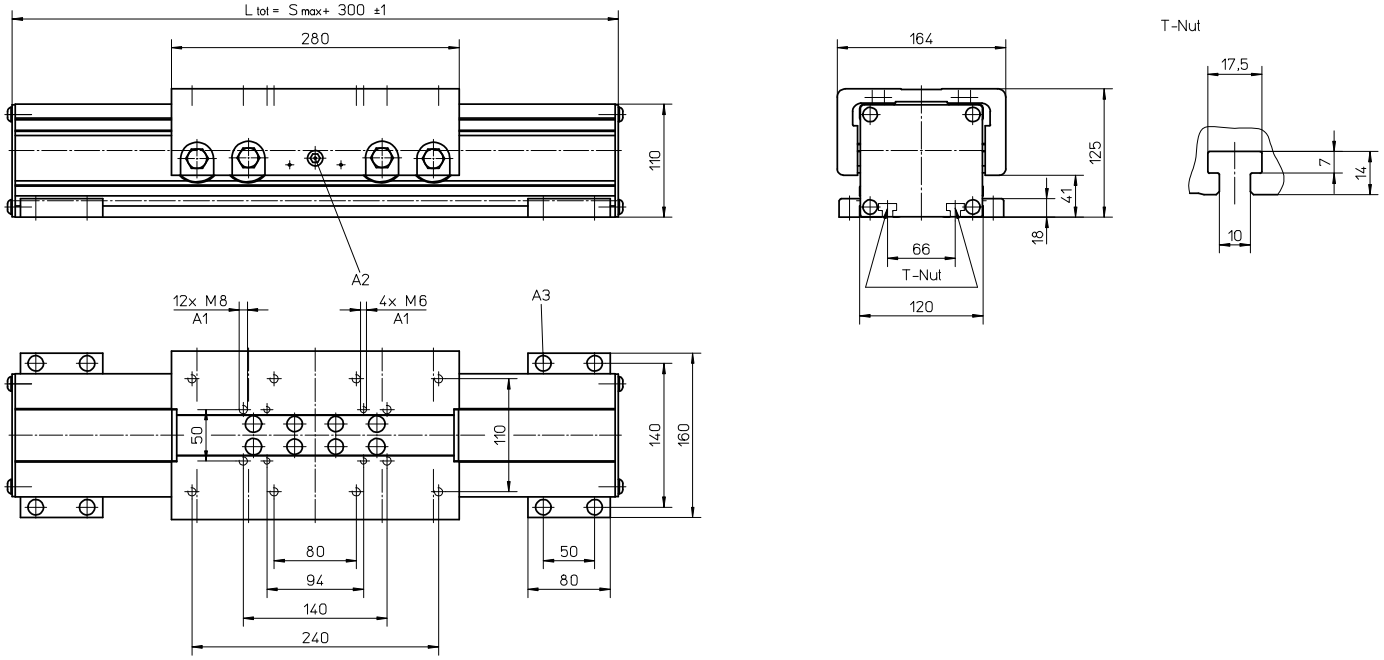

A1: depth 12
A2: funnel type lubricating nipple DIN3405-M6×1-D1

A3: socket cap screw ISO4762-M8×20 8.8

Accessories

Undriven Units

WM40N

» Ordering key - see page 209
» Technical data - see page 18

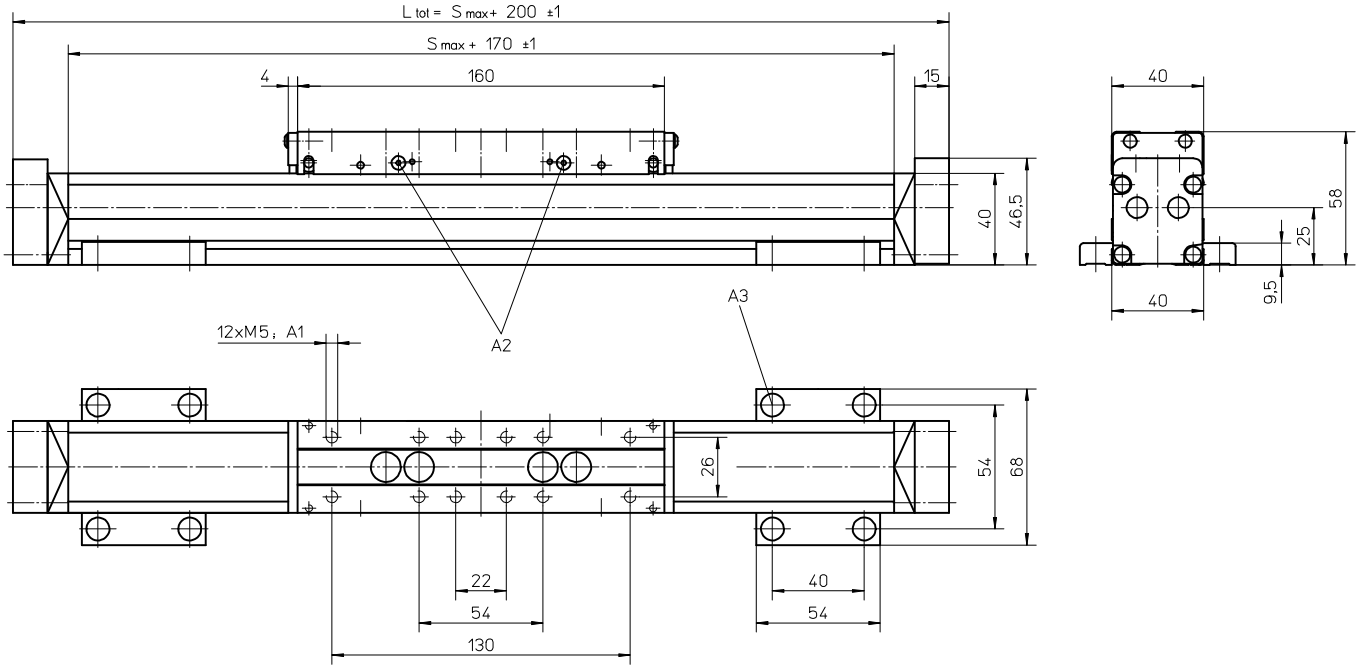

A1: depth 7
A2: lubricating nipple on both sides DIN3405 D 1/A

A3: socket cap screw ISO4762-M5×12 8.8

WM60N

» Ordering key - see page 209
» Technical data - see page 20

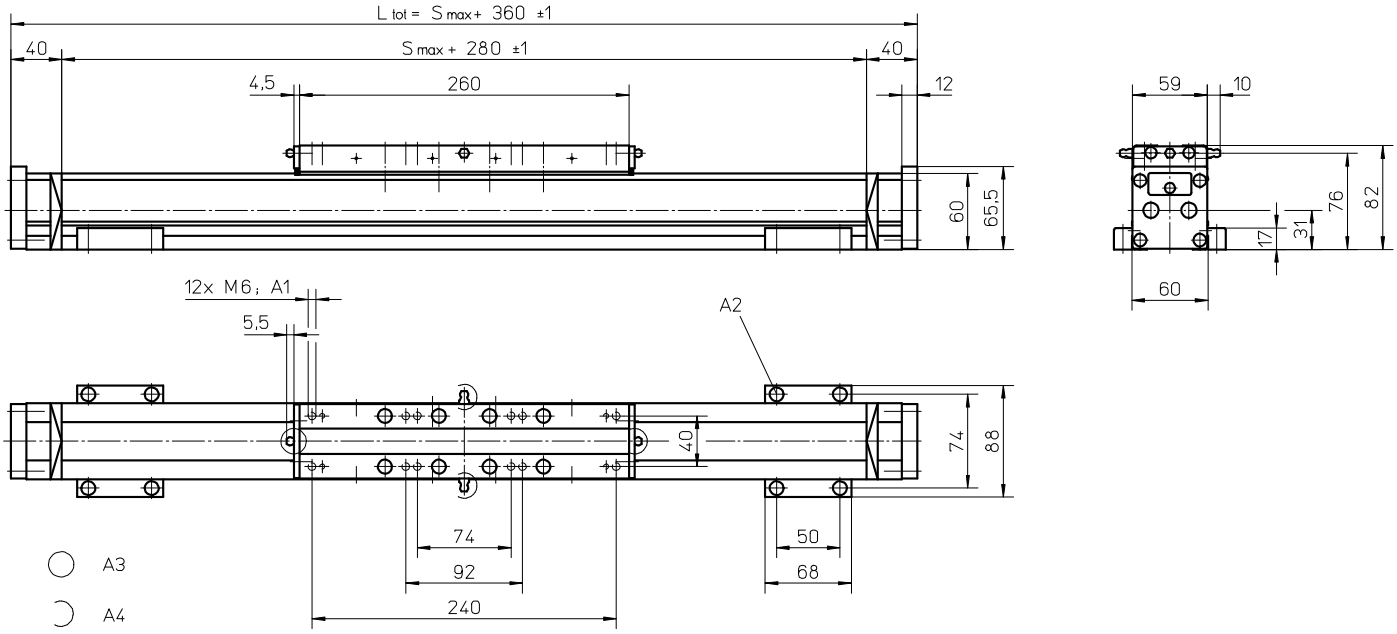

A1: depth 11
A2: socket cap screw ISO4762-M6×20 8.8

A3: tapered lubricating nipple to DIN71412 AM6
A4: can be changed over to one of the three alternative lubricating points by the customer

Accessories

Undriven Units

WM60N with Single Short Carriage

» Ordering key - see page 209
» Technical data - see page 22

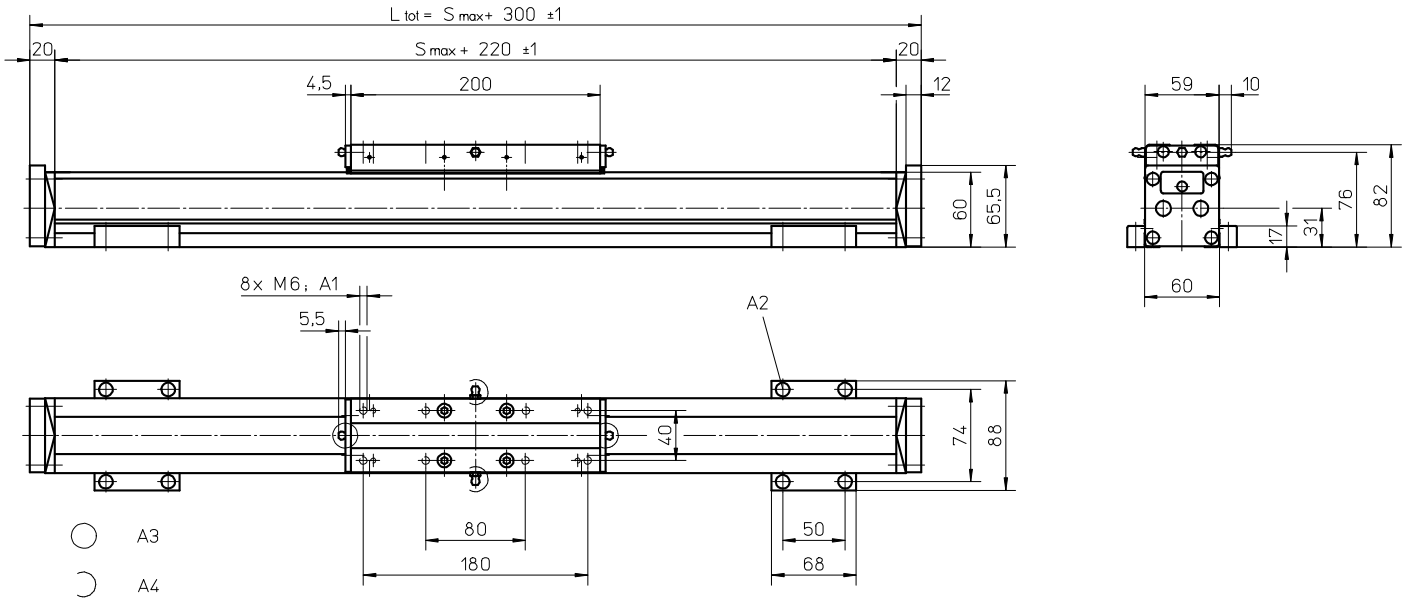

A1: depth 11
A2: socket cap screw ISO4762-M6×20 8.8

A3: tapered lubricating nipple to DIN71412 AM6
A4: can be changed over to one of the three alternative lubricating points by the customer

WM80N

» Ordering key - see page 209
» Technical data - see page 26

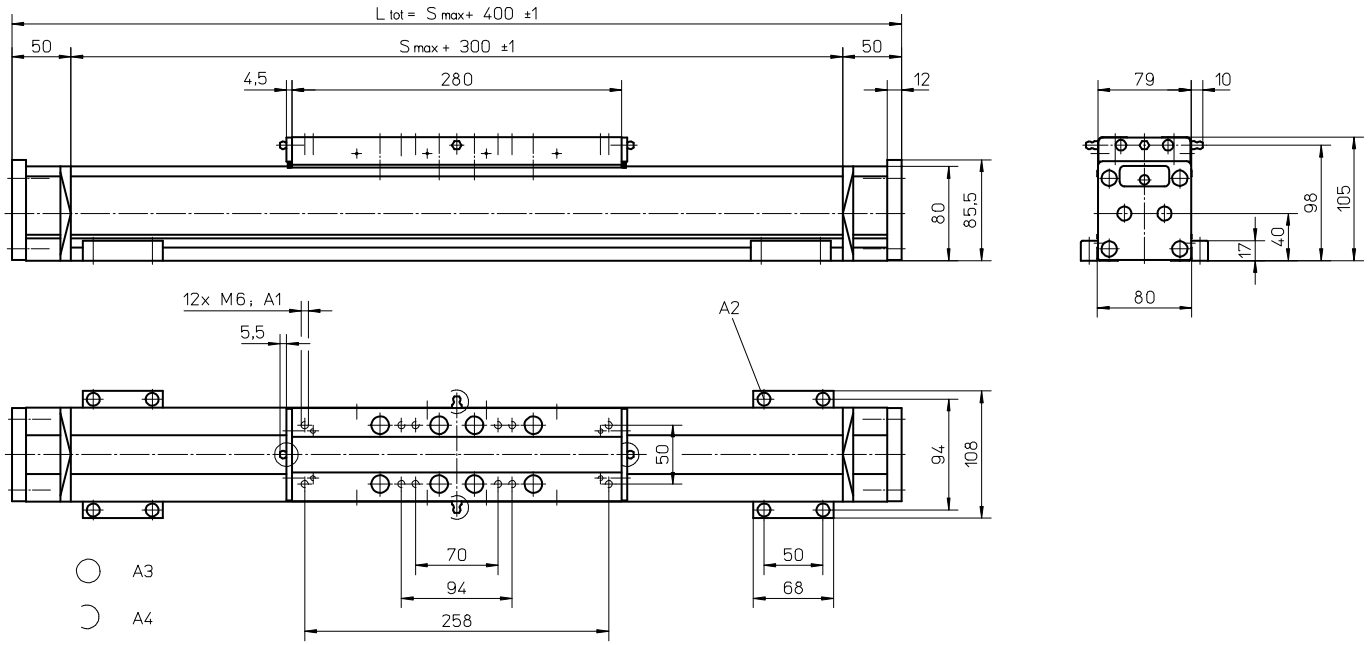

A1: depth 12
A2: socket cap screw ISO4762-M6×20 8.8

A3: tapered lubricating nipple to DIN71412 AM6
A4: can be changed over to one of the three alternative lubricating points by the customer

Accessories

Undriven Units

WM80N with Single Short Carriage

» Ordering key - see page 209
» Technical data - see page 28

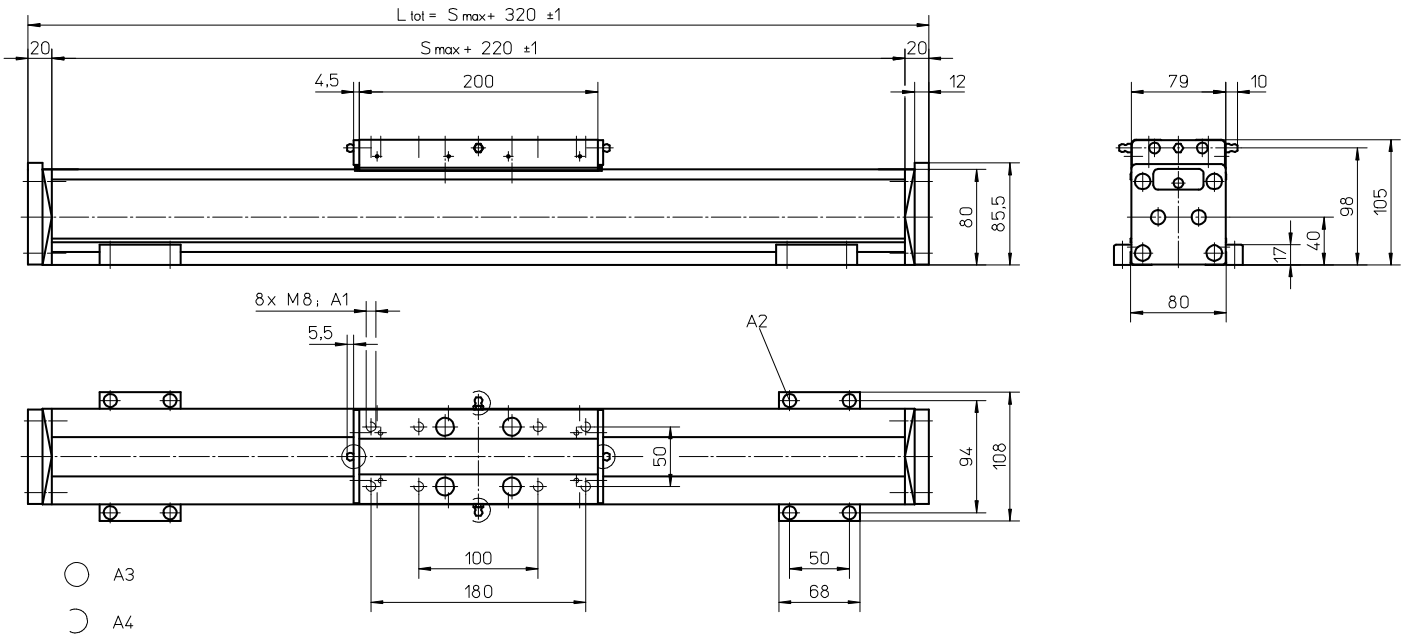

A1: depth 12
A2: socket cap screw ISO4762-M6×20 8.8

A3: tapered lubricating nipple to DIN71412 AM6
A4: can be changed over to one of the three alternative lubricating points by the customer

WM120N

» Ordering key - see page 209
» Technical data - see page 30

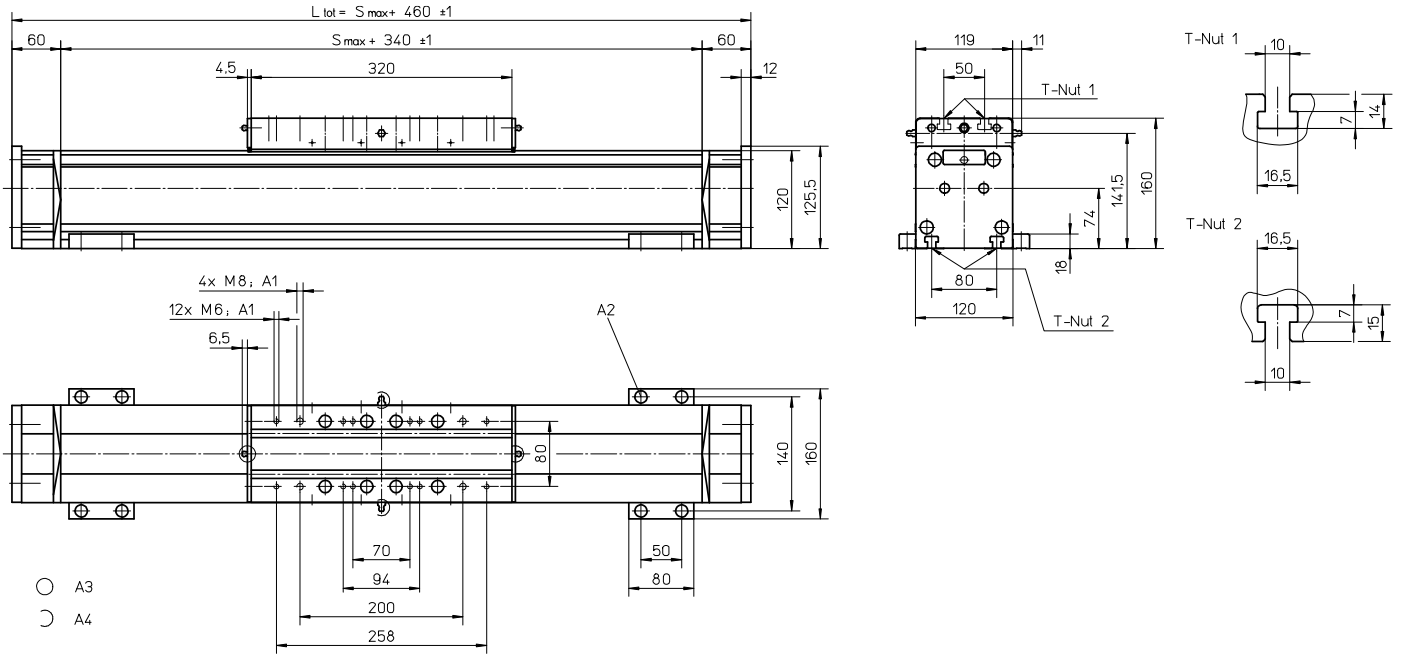

A1: depth 22
A2: socket cap screw ISO4762-M8×20 8.8

A3: tapered lubricating nipple to DIN71412 M8×1
A4: can be changed over to one of the three alternative lubricating points by the customer

Accessories

Undriven Units

M75N

» Ordering key - see page 210
» Technical data - see page 54

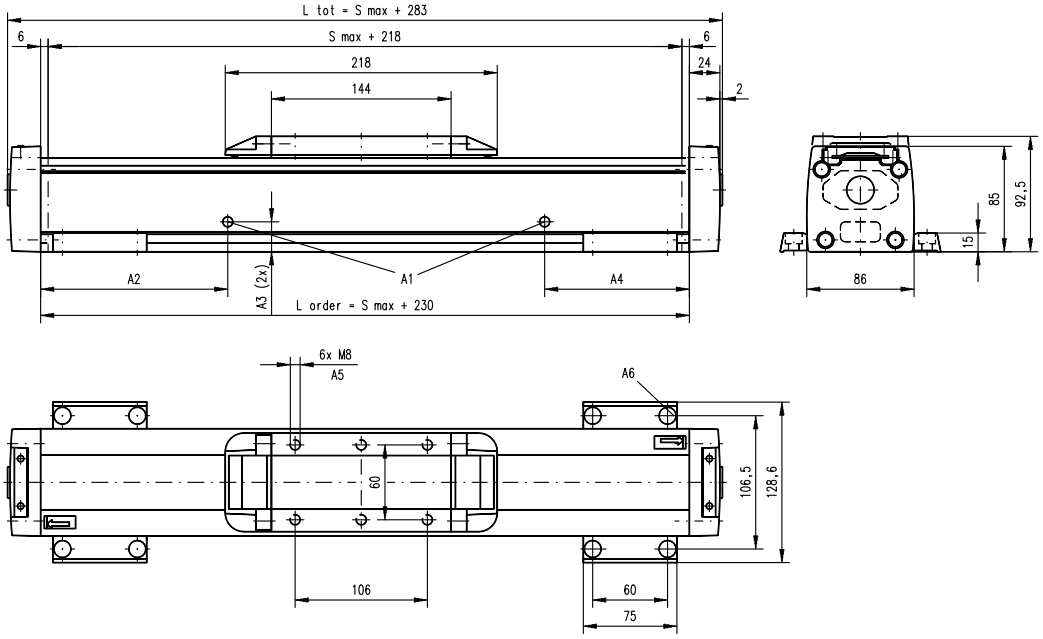

A1: lubrication holes ø6 (MG07N), ø10 (MF07N)
A2: 150 (MG07N), 100 (MF07N)
A3: 24 (MG07N), 43 (MF07N)
A4: 300 (MG07N), 320 (MF07N)
A5: depth 8 Heli coil
A6: ø13,5 / ø 8,5 for socket head cap screw M8

M100N

» Ordering key - see page 210
» Technical data - see page 56

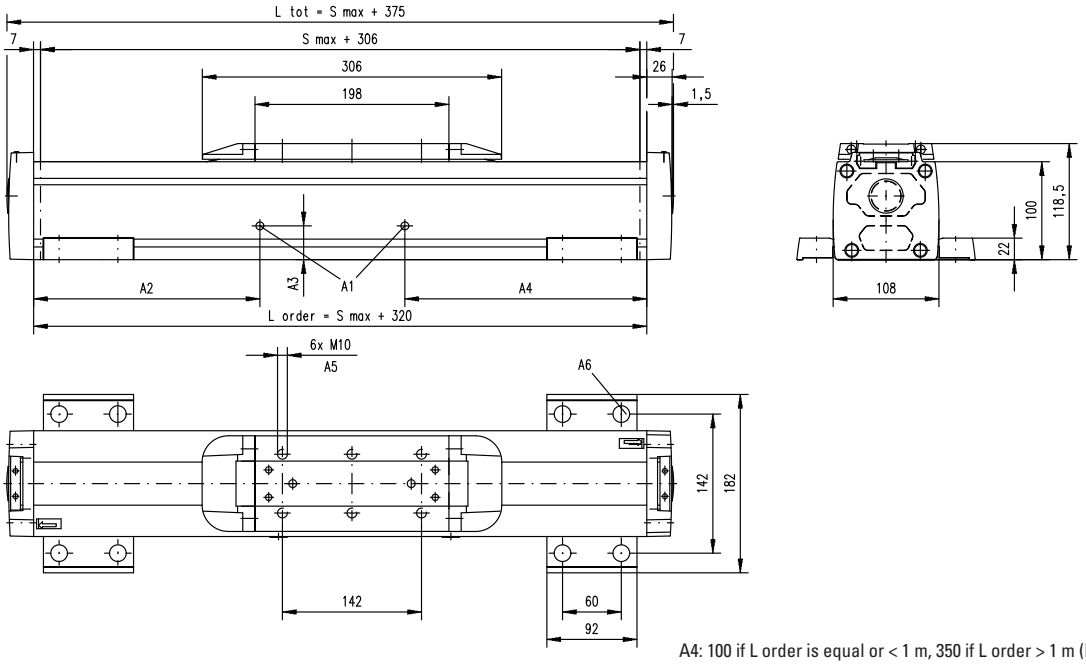

A1: lubrication holes ø6 (MG10N), ø10 (MF10N)
A2: 100 if L order is equal or < 1 m, 200 if L order > 1 m (MG10N), 265 (MF10N)
A3: 34,5 (MG10N), 56,5 (MF10N)
A4: 100 if L order is equal or < 1 m, 350 if L order > 1 m (MG10N)
265 if L order is equal or > 0,7 m, no hole if L order < 0,7 m (MF10N)
A5: depth 10 Heli coil
A6: ø17 / ø 10,5 for socket head cap screw M10

Accessories

Dynamic Servo Actuators

Thomson offers a range of “ready-to-run” linear actuators called Dynamic Servo Actuators. One part number will include everything: a linear actuator, a gear, a flange, necessary couplings, a servo motor and a servo drive. All necessary cables, a set of limit switches and a mounting kit are also included. This will significantly reduce the time spent on engineering, component selection and comissioning for an application. A free user friendly sizing and selection software is available to assist you in the process of getting the ultimate package for your specific application.

Accessories

Multi Axis System Kits

Using the wide range of Thomson linear units it is easy to create complex robots or manipulators regardless of the application. We can offer solutions for most applications, whether it is a high-speed short cycle application, a high precision pick and place equipment, hydraulics replacement or a heavy load and long movements application in a harsh environment.

We offer a wide range of brackets and fixation components that enables you to design your complete linear unit motion system. And together with our Kollmorgen motor and drive packages we can supply you the complete motion solution. For sizing and selection of a system please contact us for more detailed information.

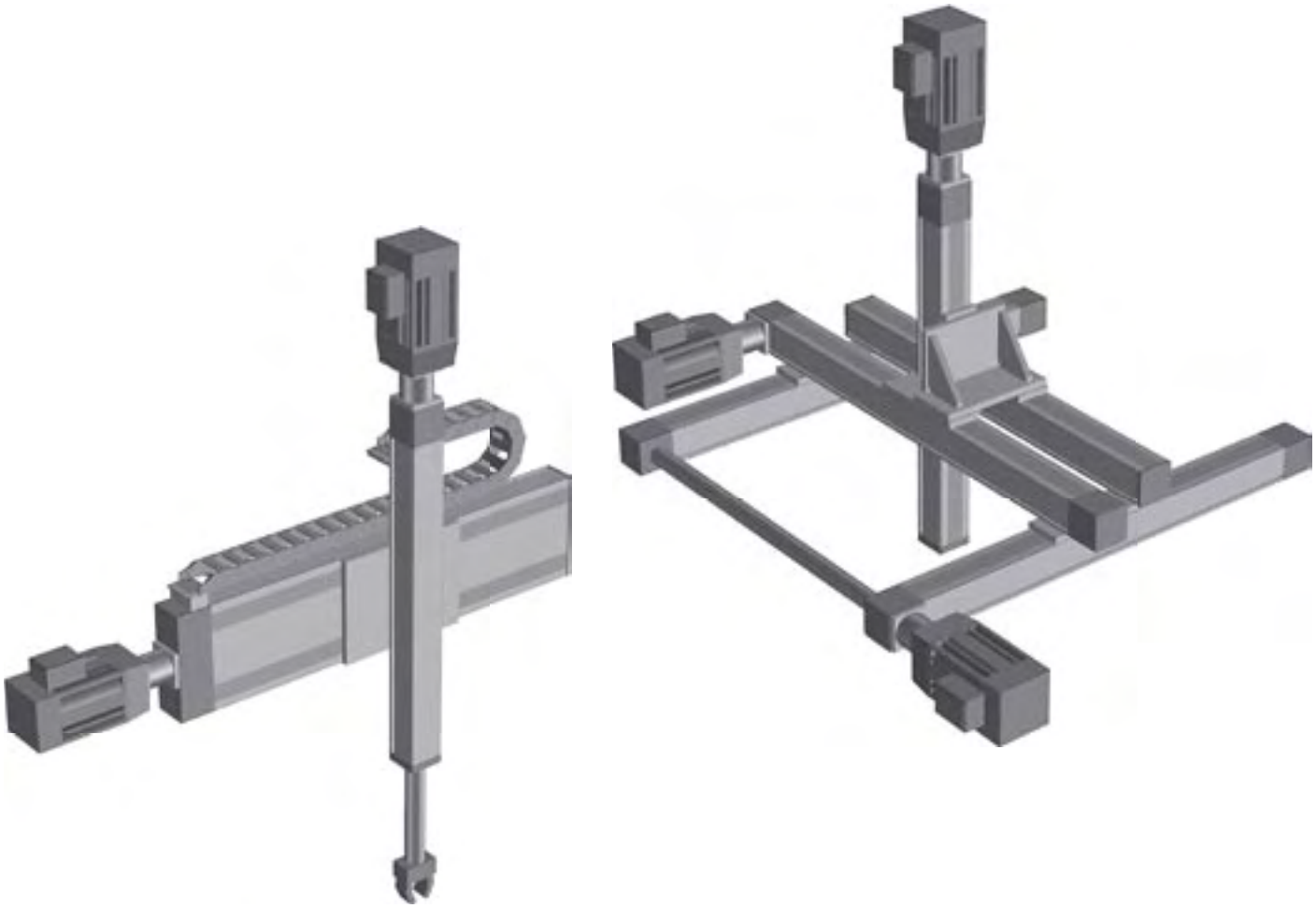

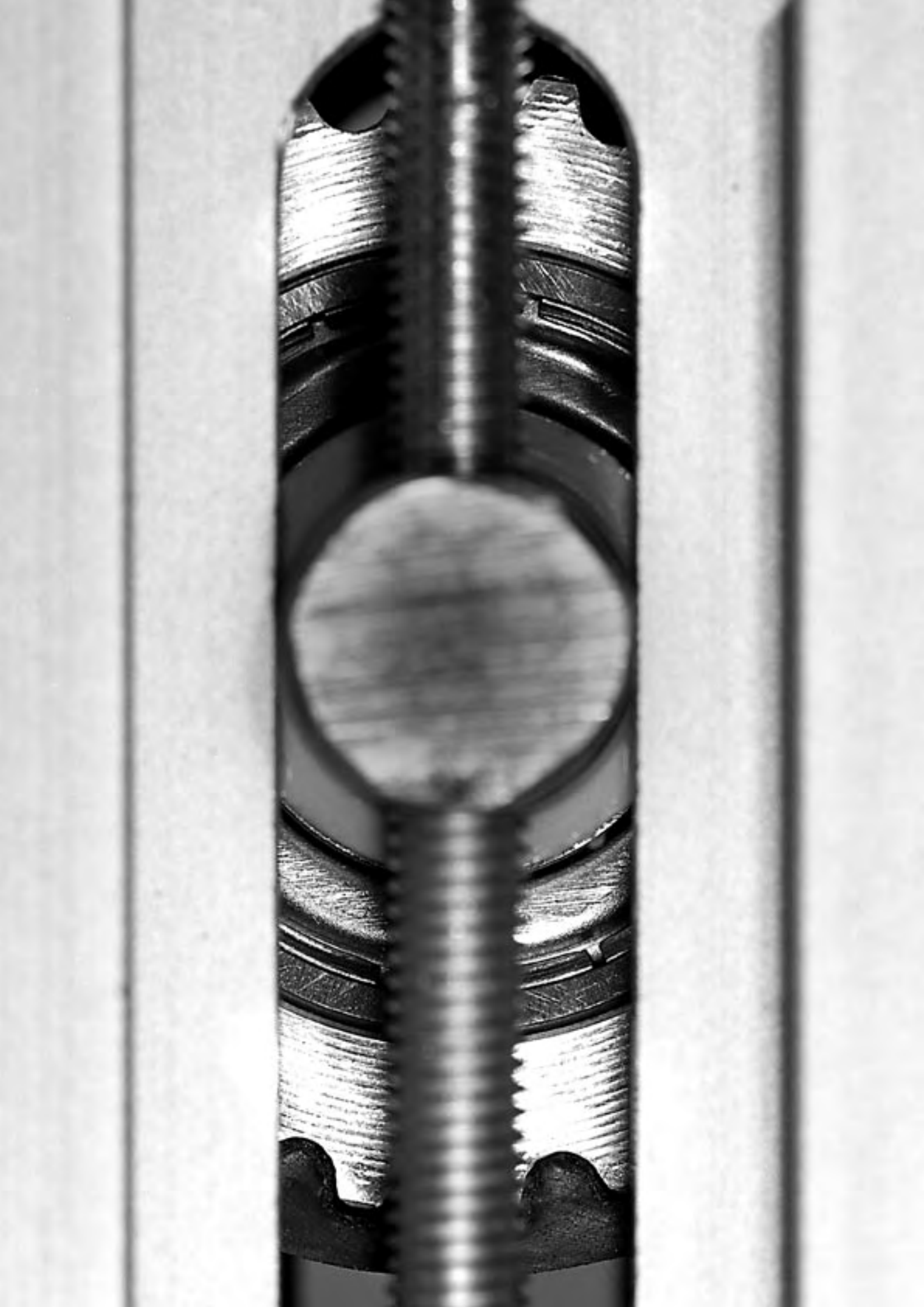

Additional Technical Data

Linear Units with Ball Screw Drive and Ball Guides

Technical Data

Parameter		WM40S	WM40D	WM60D	WM60S	WM60X	WM80D	WM80S	WM120D
Geometrical moment of inertia of the profile (Iy)	[mm^4]	$10{,}8 \times 10^4$	$10{,}8 \times 10^4$	$5{,}8 \times 10^5$	$5{,}8 \times 10^5$	$5{,}8 \times 10^5$	$1{,}85 \times 10^6$	$1{,}85 \times 10^6$	$7{,}7 \times 10^6$
Geometrical moment of inertia of the profile (Iz)	[mm^4]	$13{,}4 \times 10^4$	$13{,}4 \times 10^4$	$5{,}9 \times 10^5$	$5{,}9 \times 10^5$	$5{,}9 \times 10^5$	$1{,}94 \times 10^6$	$1{,}94 \times 10^6$	$9{,}4 \times 10^6$
Friction factor of the guide system (μ)		0,05	0,05	0,1	0,1	0,1	0,1	0,1	0,1
Effiency of the unit		0,8	0,8	0,8	0,8	0,8	0,8	0,8	0,8
Bending factor (b)		0,0003	0,0003	0,0003	0,0003	0,0003	0,0003	0,0003	0,0003
Inertia of ball screw (jsp)	[kgm^2/m]	$1{,}13 \times 10^{-5}$	$1{,}13 \times 10^{-5}$	$8{,}46 \times 10^{-5}$	$8{,}46 \times 10^{-5}$	$8{,}46 \times 10^{-5}$	$2{,}25 \times 10^{-4}$	$2{,}25 \times 10^{-4}$	$6{,}34 \times 10^{-4}$
Dynamic load rating of ball screw (Cx)	[N]								
05 mm lead		4400	4400	10500	10500	10500	12300	12300	21500
10 mm lead		-	-	-	-	-	13200	13200	33400
20 mm lead		-	-	11600	11600	-	13000	13000	29700
40 mm lead		-	-	-	-	-	-	-	14900
50 mm lead		-	-	8400	8400	-	15400	15400	-
Dynamic load rating of ball guide (Cy)	[N]	2 × 2650	2 × 2650	4 × 11495	2 × 12964	4 × 11495	4 × 14356	2 × 18723	4 × 18723
Dynamic load rating of ball guide (Cz)	[N]	2 × 3397	2 × 3397	4 × 10581	2 × 11934	4 × 10581	4 × 13739	2 × 17919	4 × 17919
Distance between ball guide carriages (Lx)	[mm]	87	136	141,7	-	141,7	154	-	186
Distance between ball guide carriages (Ly)	[mm]	-	-	35	35	35	49,75	49,75	80,75

Parameter		WV60	WV80	WV120	MLSM60D	MLSM80D	2HBE10	2HBE20
Geometrical moment of inertia of the profile (Iy)	[mm^4]	$5{,}8 \times 10^5$	$1{,}85 \times 10^6$	$7{,}7 \times 10^6$	$1{,}19 \times 10^6$	$3{,}77 \times 10^6$	$1{,}69 \times 10^6$	$1{,}77 \times 10^7$
Geometrical moment of inertia of the profile (Iz)	[mm^4]	$5{,}9 \times 10^5$	$1{,}94 \times 10^6$	$9{,}4 \times 10^6$	$1{,}08 \times 10^7$	$4{,}71 \times 10^7$	$1{,}3\ 10^5$	$5{,}95 \times 10^5$
Friction factor of the guide system (μ)		no guides	no guides	no guides	0,1	0,1	0,05	0,05
Effiency of the unit		0,8	0,8	0,8	0,8	0,8	0,9	0,9
Bending factor (b)		0,0003	0,0003	0,0003	0,0003	0,0003	0,0003	0,0003
Inertia of ball screw (jsp)	[kgm^2/m]	$8{,}46 \times 10^{-5}$	$2{,}25 \times 10^{-4}$	$6{,}34 \times 10^{-4}$	$2{,}25 \times 10^{-4}$	$6{,}34 \times 10^{-4}$	$3{,}67 \times 10^{-5}$	$2{,}28 \times 10^{-4}$
Dynamic load rating of ball screw (Cx)	[N]							
05 mm lead		10500	12300	21500	12300	21500	13000	18300
10 mm lead		-	13200	33400	13200	33400	6000	22800
20 mm lead		11600	13000	29700	13000	29700	-	-
25 mm lead		-	-	14900	-	-	-	10000
40 mm lead		8400	15400	-	-	14900	-	-
50 mm lead					15400	-	-	-
Dynamic load rating of ball guide (Cy)	[N]	no guides	no guides	no guides	4 × 13770	4 × 17965	4 × 2820	4 × 13000
Dynamic load rating of ball guide (Cz)	[N]	no guides	no guides	no guides	4 × 13770	4 × 17965	4 × 2820	4 × 13000
Distance between ball guide carriages (Lx)	[mm]	no guides	no guides	no guides	163	185	54	112
Distance between ball guide carriages (Ly)	[mm]	no guides	no guides	no guides	105	164	70	145

Additional Technical Data

Linear Units with Ball Screw and Slide Guides

Technical Data

Parameter		WB40	M55	M75	M100	M75D	M100D
Geometrical moment of inertia of the profile (Iy)	[mm⁴]	$1{,}04 \times 10^5$	$4{,}27 \times 10^5$	$1{,}9 \times 10^6$	$5{,}54 \times 10^6$	$1{,}9 \times 10^6$	$5{,}54 \times 10^6$
Geometrical moment of inertia of the profile (Iz)	[mm⁴]	$1{,}29 \times 10^5$	$3{,}4 \times 10^5$	$1{,}15 \times 10^6$	$3{,}86 \times 10^6$	$1{,}15 \times 10^6$	$3{,}86 \times 10^6$
Friction factor of the guide system (μ)		0,3	0,15	0,15	0,15	0,15	0,15
Effiency							
ball nut unit		0,8	0,8	0,8	0,8	0,8	0,8
composite nut unit		-	0,5	0,5	0,5	-	-
Bending factor (b)		0,0005	0,0005	0,0005	0,0005	0,0005	0,0005
Inertia of ball screw (jsp)	[kgm²/m]	$1{,}13 \times 10^{-5}$	$4{,}1 \times 10^{-5}$	$1{,}6 \times 10^{-4}$	$2{,}5 \times 10^{-4}$	$1{,}6 \times 10^{-4}$	$2{,}5 \times 10^{-4}$
Dynamic load rating of ball screw (Cx)	[N]						
05 mm lead		4400	4600	10400	12500	10400	12500
05,8 mm lead		-	5420	-	-	-	-
10 mm lead		-	4200	-	20600	-	20100
12,7 mm lead		-	-	17960	-	-	-
20 mm lead		-	1900	10400	-	10400	-
25 mm lead		-	-	-	11800	-	11800
32 mm lead		-	2000	-	-	-	-

Linear Units with Belt Drive and Ball Guides

Technical Data

Parameter		WH40	M55	M75	M100	MLSM80Z
Geometrical moment of inertia of the profile (Iy)	[mm⁴]	$12{,}6 \times 10^4$	$4{,}59 \times 10^5$	$1{,}9 \times 10^6$	$5{,}54 \times 10^6$	$3{,}77 \times 10^6$
Geometrical moment of inertia of the profile (Iz)	[mm⁴]	$15{,}3 \times 10^4$	$3{,}56 \times 10^5$	$1{,}15 \times 10^6$	$3{,}86 \times 10^6$	$4{,}71 \times 10^7$
Friction factor of the guide system (μ)		0,05	0,02	0,02	0,02	0,1
Effiency of the unit		0,85	0,95	0,95	0,95	0,85
Bending factor (b)		0,0005	0,0005	0,0005	0,0005	0,0005
Specific mass of belt	[kg/m]	0,032	0,09	0,16	0,31	0,517
Inertia of pulleys (Jsyn)	[kgm²]	$8{,}8 \times 10^{-6}$	$1{,}7 \times 10^{-5}$	$6{,}8 \times 10^{-5}$	$8{,}5 \times 10^{-5}$	$5{,}077 \times 10^{-4}$
Dynamic load rating of ball guide (Cy)	[N]	2 × 2650	2 × 2717	2 × 8206	2 × 13189	4 × 17965
Dynamic load rating of ball guide (Cz)	[N]	2 × 3397	2 × 3484	2 × 15484	2 × 24885	4 × 17965
Distance between ball guide carriages (Lx)	[mm]	72	78	96	140	185
Distance between ball guide carriages (Ly)	[mm]	-	-	-	-	164

Additional Technical Data

Linear Units with Belt Drive and Slide Guides

Technical Data

Parameter		M50	M55	M75	M100
Geometrical moment of inertia of the profile (Iy)	[mm^4]	$2,61 \times 10^5$	$4,59 \times 10^5$	$1,9 \times 10^6$	$5,54 \times 10^6$
Geometrical moment of inertia of the profile (Iz)	[mm^4]	$2,44 \times 10^5$	$3,56 \times 10^5$	$1,15 \times 10^6$	$3,86 \times 10^6$
Friction factor of the guide system (μ)		0,15	0,15	0,15	0,15
Effiency of the unit		0,85	0,85	0,85	0,85
Bending factor (b)		0,0005	0,0005	0,0005	0,0005
Specific mass of belt	[kg/m]	0,086	0,09	0,16	0,31
Inertia of pulleys (Jsyn)	[kgm^2]	$3,1 \times 10^{-5}$	$1,7 \times 10^{-5}$	$6,8 \times 10^{-5}$	$8,5 \times 10^{-5}$

Linear Units with Belt Drive and Wheel Guides

Technical Data

Parameter		WH50	WH80	WH120	MLSH60Z	MLSH80Z
Geometrical moment of inertia of the profile (Iy)	[mm^4]	$3,3 \times 10^5$	$1,93 \times 10^6$	$6,69 \times 10^6$	$1,29 \times 10^6$	$4,05 \times 10^6$
Geometrical moment of inertia of the profile (Iz)	[mm^4]	$2,65 \times 10^5$	$1,8 \times 10^6$	$6,88 \times 10^6$	$1,2 \times 10^7$	$4,84 \times 10^7$
Friction factor of the guide system (μ)		0,1	0,1	0,1	0,1	0,1
Effiency of the unit		0,85	0,85	0,85	0,85	0,85
Bending factor (b)		0,0005	0,0005	0,0005	0,0005	0,0005
Specific mass of belt	[kg/m]	0,055	0,21	0,34	0,119	0,517
Inertia of pulleys (Jsyn)	[kgm^2]	$1,928 \times 10^{-5}$	2.473×10^{-4}	$1,004 \times 10^{-3}$	$4,604 \times 10^{-5}$	$5,077 \times 10^{-4}$
Dynamic load rating of wheel guide (Cy)	[N]	-	-	-	4×1266	4×6192
Dynamic load rating of wheel guide (Cz)	[N]	4×1270	4×3670	4×16200	4×1266	4×6192
Distance between carriage wheels (Lx)	[mm]	198	220	180	109	210
Distance between carriage wheels (Ly)	[mm]	39	65	97	102,5	155,5

Additional Technical Data

Linear Lifting Units

Technical Data

Parameter		WHZ50	WHZ80	Z2	Z3	ZB
Geometrical moment of inertia of the profile (Ix)	[mm^4]	-	-	$1{,}87 \times 10^7$	$1{,}87 \times 10^7$	$1{,}01 \times 10^6$
Geometrical moment of inertia of the profile (Iy)	[mm^4]	$3{,}3 \times 10^5$	$1{,}93 \times 10^6$	$2{,}19 \times 10^7$	$2{,}19 \times 10^7$	$1{,}7 \times 10^6$
Geometrical moment of inertia of the profile (Iz)	[mm^4]	$2{,}65 \times 10^5$	$1{,}8 \times 10^6$	-	-	-
Dynamic load rating of ball screw (Fx)	[N]	belt drive	belt drive	-	-	-
Dynamic load rating of ball screw (Fz) ball screw ø 25 lead 10 mm ball screw ø 25 lead 25 mm ball screw ø 32 lead 10 mm	[N			 21248 11182 47200	 21248 11182 47200	 belt drive
Friction factor of the guide system (μ)		0,1	0,1	0,15	0,15	0,02
Effiency of the unit		0,85	0,85	0,8	0,8	0,95
Specific mass of belt	[kg/m]	0,055	0,119	-	-	0,56
Inertia of pulleys (Jsyn)	[kgm^2]	$6{,}906 \times 10^{-5}$	$5{,}026 \times 10^{-4}$	-	-	$2{,}73 \times 10^{-3}$
Inertia of ball screw (jsp) ball screw ø 25 lead 10 ball screw ø 25 lead 25 ball screw ø 32 lead 10	[kgm^2/m]	 - - -	 - - -	 $2{,}1 \times 10^{-4}$ $2{,}6 \times 10^{-4}$ $6{,}43 \times 10^{-4}$	 $2{,}1 \times 10^{-4}$ $2{,}6 \times 10^{-4}$ $6{,}43 \times 10^{-4}$	 - - -
Dynamic load rating of ball guide (Cx)	[N]	-	-	slide guide	slide guide	13100
Dynamic load rating of ball guide (Cy)	[N]	4 × 1270	4 × 3670	slide guide	slide guide	13100
Distance between ball guide carriages (Lx)	[mm]	198	220	-	-	20
Distance between ball guide carriages (Ly)	[mm]	39	65	slide guide	slide guide	255
Distance between ball guide carriages (Lz)	[mm]	-	-	slide guide	slide guide	255
Definition of forces		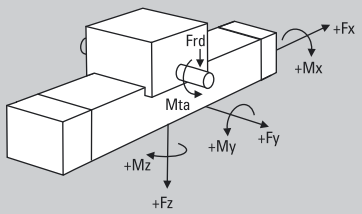	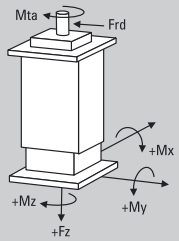	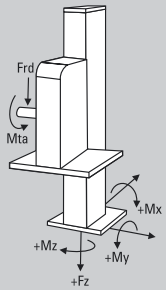		

Additional Technical Data

Linear Rod Units

Technical Data

Parameter		WZ60	T90	T130
Geometrical moment of inertia of the profile (Iy)	[mm^4]	$5{,}8 \times 10^5$	$3{,}05 \times 10^6$	$1{,}19 \times 10^7$
Geometrical moment of inertia of the profile (Iz)	[mm^4]	$5{,}9 \times 10^5$	$2{,}91 \times 10^6$	$1{,}23 \times 10^7$
Friction factor of the guide system (μ)		0,1	0,15	0,15
Effiency of the unit		0,8	0,8	0,8
Inertia of ball screw (jsp)	[kgm^2/m]			
05 mm lead		$8{,}46 \times 10^{-5}$	$2{,}21 \times 10^{-4}$	-
10 mm lead		-	$2{,}1 \times 10^{-4}$	$1{,}45 \times 10^{-3}$
20 mm lead		$8{,}46 \times 10^{-5}$	$2{,}6 \times 10^{-4}$	$1{,}45 \times 10^{-3}$
25 mm lead		-	$6{,}34 \times 10^{-4}$	-
32 mm lead		-	$6{,}34 \times 10^{-4}$	-
40 mm lead		-	-	$1{,}45 \times 10^{-3}$
50 mm lead		$8{,}46 \times 10^{-5}$	-	-
Dynamic load rating of ball screw (Cx)	[N]			
05 mm lead		10500	13100	-
10 mm lead		-	22900	64900
20 mm lead		11600	47200	52200
25 mm lead		-	13000	-
32 mm lead		-	20000	-
40 mm lead		-	-	59700
50 mm lead		8400	-	-
Dynamic load rating of ball guide (Cy)	[N]	2 × 12964	slide guides	slide guides
Dynamic load rating of ball guide (Cz)	[N]	2 × 11943	slide guides	slide guides
Distance between ball guide carriages (Lx)	[mm]	-	slide guides	slide guides
Distance between ball guide carriages (Ly)	[mm]	35	slide guides	slide guides
Dynamic rating of the ball bushing	[N]	8300	slide guides	slide guides

Drive Calculations

Screw Driven Units

Feed Force Formula [N]

$$F_x = m \times g \times \mu$$

F_x = feed force [N]
m = total mass to be moved [kg] [1]
g = acceleration due to gravity [m/s²]
μ = friction factor specific for each unit

Acceleration Force Formula [N]

$$F_a = m \times a$$

F_a = acceleration force [N]
m = mass to be operated [kg]
a = acceleration [m/s²) [2]

Power Formula [kW]

$$P = \frac{M_A \times n_{max} \times 2 \times 3{,}14}{60 \times 1000}$$

P = required power [kW]
M_A = required drive moment [Nm]
n_{max} = maximum required rotational speed [rpm]

Drive Moment Formulae [Nm]

$$M_A = M_{load} + M_{trans} + M_{rot} + M_{idle}$$

$$M_{load} = \frac{F_x \times p}{2 \times 3{,}14 \times 1000}$$

$$M_{trans} = \frac{F_a \times p}{2 \times 3{,}14 \times 1000}$$

$$M_{rot} = j_{sp} \times \frac{2 \times 3{,}14 \times n_{max} \times a \times 2}{V_{max} \times 60 \times 1000}$$

M_{idle} = see table for unit in question

M_A = required drive moment [Nm]
M_{load} = moment as a result of various loads [N]
M_{trans} = translational acceleration moment [Nm]
M_{rot} = rotational acceleration moment [Nm]
M_{idle} = carriage/rod idle torque [Nm] [3]
F_x = feed force [N]
p = screw lead [mm]
F_a = maximum required acceleration force [N]
j_{sp} = inertia of ball screw per meter [kgm²/m] [4]
n_{max} = maximum required rotational speed [rpm]
a =maximum required acceleration [m/s²)
V_{max} = maximum required linear speed [m/s]

[1] The total mass is the mass of all masses to be moved (objects to be moved, carriage(s)/rod, screw).

[2] In vertical applications, the mass acceleration must be added to the acceleration due to gravity g (9,81 m/s²).

[3] This value can be found in the carriage idle torque tables for each unit.

[4] This value can be found in the additional technical data tables.

Drive Calculations

Belt Driven Units

Feed Force Formula [N]

$$F_x = m \times g \times \mu$$

F_x = feed force [N]
m = total mass to be moved [kg] [1]
g = acceleration due to gravity [m/s²]
μ = friction factor specific for each unit

Acceleration Force Formula [N]

$$F_a = m \times a$$

F_a = acceleration force [N]
m = mass to be operated [kg]
a = acceleration [m/s²] [2]

Power Formula [kW]

$$P = \frac{M_A \times n_{max} \times 2 \times 3{,}14}{60 \times 1000}$$

P = required power [kW]
M_A = required drive moment [Nm]
n_{max} = maximum required rotational speed [rpm]

Drive Moment Formulae [Nm]

$$M_A = M_{load} + M_{trans} + M_{rot} + M_{idle}$$

$$M_{load} = \frac{F_x \times d_o}{1000 \times 2}$$

$$M_{trans} = \frac{F_a \times d_o}{1000 \times 2}$$

$$M_{rot} = J_{syn} \times \frac{2 \times 3{,}14 \times n_{max}}{60} \times \frac{a}{V_{max}}$$

M_{idle} = see table for unit in question

M_A = required drive moment [Nm]
M_{load} = moment as a result of various loads [N]
M_{trans} = translational acceleration moment [Nm]
M_{rot} = rotational acceleration moment [Nm]
M_{idle} = carriage/rod idle torque [Nm] [3]
F_x = feed force [N]
d_o = pulley diameter [mm] [4]
F_a = maximum required acceleration force [N]
J_{syn} = idle torque of pulleys [kgm²] [5]
n_{max} = maximum required rotational speed [rpm]
a = maximum required acceleration [m/s²]
V_{max} = maximum required linear speed [m/s]

[1] The total mass is the mass of all masses to be moved (objects to be moved, carriage(s)/rod, belt).

[2] In vertical applications, the mass acceleration must be added to the acceleration due to gravity g (9,81 m/s²).

[3] This value can be found in the carriage idle torque tables.

[4] This value can be found in the performance specifications tables for each unit.

[5] This value can be found in the additional technical data tables.

Deflection Calculations

How to calculate the deflection of the profile

Load Cases

1.

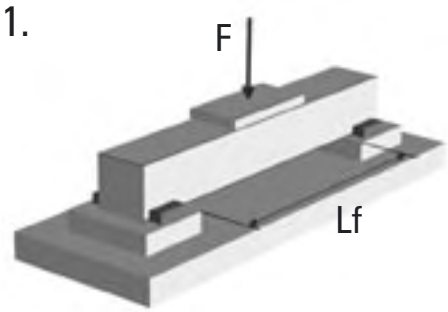

Profile supported in both ends.
Profile fixed at both sides.

2.

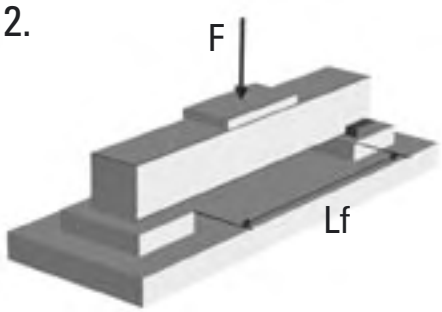

Profile supported in both ends.
Profile fixed at one side.

3.

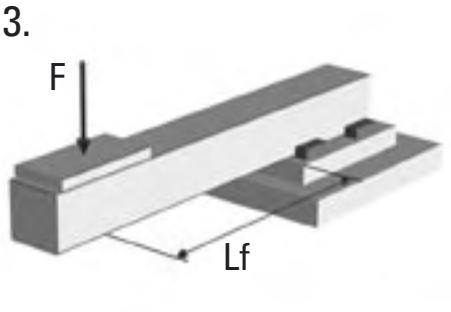

Profile supported in one end.
Profile fixed at one side.

Permissible Profile Deflection Formula [mm]

$$f_h = L_f \times b$$

f_h = permissible profile deflection [mm]

L_f = lenght of profile being bent [mm]

b = bending factor [1]

Profile Deflection Formulae [mm]

Load Case 1.

$$f_{max} = \frac{m'_{100} \times g \times L_f^4}{100 \times 384 \times E_{Al} \times I_y} + \frac{(m_{ext} \times m_c) \times g \times L_f^3}{192 \times E_{Al} \times I_y}$$

Load Case 2.

$$f_{max} = \frac{m'_{100} \times g \times L_f^4}{100 \times 185 \times E_{Al} \times I_y} + \frac{(m_{ext} \times m_c) \times g \times L_f^3}{48 \times \sqrt{5} \times E_{Al} \times I_y}$$

Load Case 3.

$$f_{max} = \frac{m'_{100} \times g \times L_f^4}{100 \times 8 \times E_{Al} \times I_y} + \frac{(m_{ext} \times m_c) \times g \times L_f^3}{3 \times E_{Al} \times I_y}$$

f_{max} = deflection of the profile [mm]

m'_{100} = weight of every 100 mm of stroke [kg] [2]

m_{ext} = external load on carriage [kg]

m_c = weight of carriage(s) [kg] [2]

g = acceleration due to gravity [m/s^2]

E_{Al} = elastic modulus of aluminium (70000 N/mm^2)

I_y = geometrical moment of inertia of the profile in Y direction [mm^4] [1]

[1] This value can be found in the additional technical data tables.

[2] This value can be found in the performance specifications tables for each unit.

Conclusion Formulae

$f_h > f_{max}$ = deflection OK

$f_h < f_{max}$ = deflection not OK, L_f must be shorter

Deflection Calculations

Examples of calculations of the profile deflection

Example 1

Type of linear unit:
WH80

Load case:
Case 1 - profile supported in both ends and fixed at both sides.

Load to be moved by carriage:
m_{ext} = 150 kg

Distance between supports:
L_f = 600 mm

Specific unit data:
m'_{100} = 0,93 kg
m_c = 2,75 kg
EA_l = 70000 N/mm^2
I_y = 1,93 × 10^6 mm^4
b = 0,0005

Calculated values:
f_h = 0,3 mm
f_{max} = 0,013 mm

Conclusion:
$f_h > f_{max}$ = deflection OK

Example 2

Type of linear unit:
M55 (MF06B)

Load case:
Case 2 - profile supported in both ends and fixed at one side.

Load to be moved by carriage:
m_{ext} = 100 kg

Distance between supports:
L_f = 600 mm

Specific unit data:
m'_{100} = 0,53 kg
m_c = 1,2 kg
EA_l = 70000 N/mm^2
I_y = 4,59 × 10^5 mm^4
b = 0,0005

Calculated values:
f_h = 0,3 mm
f_{max} = 0,063 mm

Conclusion:
$f_h > f_{max}$ = deflection OK

Example 3

Type of linear unit:
WM80

Load case:
Case 3 - profile supported and fixed at one end.

Load to be moved by carriage:
m_{ext} = 120 kg

Distance between supports:
L_f = 400 mm

Specific unit data:
m'_{100} = 1,08 kg
m_c = 4,26 kg
EA_l = 70000 N/mm^2
I_y = 1,85 × 10^6 mm^4
b = 0,0003

Calculated values:
f_h = 0,12 mm
f_{max} = 0,203 mm

Conclusion:
$f_h > f_{max}$ = deflection <u>not</u> OK

Ordering

How to Order

When ordering a Thomson linear unit it is necessary to first make sure that the proper sizing and selection has been done. The demand on your system will impact on your choice of stroke length, profile size, belt or screw drive, environmental protection demands etc.

The load and speed demand will tell you the configuration of gearboxes drive shafts and motor attachment accessories that are necessary. You will also need to evaluate what accessories that are necessary, such as mounting brackets, gearboxes, switches, sensors and feedback devices.

We will assist you in the sizing and selection work and determining of part numbers but it is important that you are aware of the demand and need of your specific application in order to enable us to supply you with the correct linear unit.

On the following pages you will find the ordering keys for the different linear units shown in earlier chapters. These keys are self-explanatory and by following the examples you can quickly and easily learn about the different options and versions available. Some of our sizing and selection software can help you with the part numbering process. Please visit our website or contact us for further support.

Ordering Keys

Linear Units with Ball Screw Drive and Ball Guides

WM40S, WM40D, WM60S, WM60D, WM60X, WM80S, WM80D, WM120D

Your Code							
	1	2	3	4	5	6	7
Example	WM06D	010	-02545	-03715	A	Z	-0520

1. Type of unit
WM04S = WM40S unit with single ball nut
WM04D = WM40D unit with double ball nuts
WM06S = WM60S unit with single ball nut
WM06D = WM60D unit with double ball nuts
WM06X = WM60X unit with left/right screw
WM08S = WM80S unit with single ball nut
WM08D = WM80D unit with double ball nuts
WM12D = WM120D unit with double ball nuts

2. Screw lead[1]
005 = 5 mm
010 = 10 mm
020 = 20 mm
040 = 40 mm
050 = 50 mm

3. Maximum stroke (S max)
- • • • • • = distance in mm

4. Total length of unit (L tot)
- • • • • • = distance in mm

5. Drive shaft configuration[2]
A = single shaft without key way
C = single shaft with key way
G = double shafts, first without key way and second for encoder
I = double shafts, first with key way and second for encoder

6. Type of carriage[3]
N = single standard carriage
S = single short carriage
L = single long carriage
Z = double standard carriages
Y = double short carriages
M = double long carriages

7. Distance between double carriages
- 0000 = always for single carriages
- • • • • = distance in mm

[1] See teble below for available combinations of units and ball screw leads.

Type of unit	Available screw leads [mm]				
	5	10	20	40	50
WM04S	x				
WM04D	x				
WM06S	x		x		x
WM06D	x		x		x
WM06X	x				
WM08S	x	x	x		x
WM08D	x	x	x		x
WM12D	x	x	x	x	

[2] See below for the definition of shafts.

Single Double

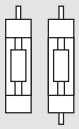

[3] See table below for available combinations of units and carriage types.

Type of unit	Available carriage types					
	N	S	L	Z	Y	M
WM04S	x		x	x		
WM04D			x			x
WM06S		x			x	
WM06D	x		x	x		
WM06X	x		x			
WM08S		x			x	
WM08D	x		x	x		
WM12D	x		x	x		

Note! for ordering of options type EN, ES, KRG, RT, ADG and MGK, see accessory index on page 127.

Ordering Keys

Linear Units with Ball Screw Drive and Ball Guides

WV60, WV80, WV120

Your Code							
	1	2	3	4	5	6	7
Example	WV08D	020	-02745	-03295	G	N	-0000

1. Type of unit
WV06D = WV60 unit
WV08D = WV60 unit
WV12D = WV120 unit

2. Ball screw lead[1]
005 = 5 mm
010 = 10 mm
020 = 20 mm
040 = 40 mm
050 = 50 mm

3. Maximum stroke (S max)
- •••••= distance in mm

4. Total length of unit (L tot)
- •••••= distance in mm

5. Drive shaft configuration[2]
A = single shaft without key way
C = single shaft with key way
G = double shafts, first without key way and second for encoder
I = double shafts, first with key way and second for encoder

6. Type of carriage
N = single standard carriage

7. Distance between double carriages
- 0000 = always for single carriages

[1] See table below for available combinations of units and ball screw leads.

Type of unit	Available screw leads [mm]				
	5	10	20	40	50
WV60	x		x		x
WV80	x	x	x		x
WV120	x	x	x	x	

[2] See below for the definition of shafts.

Single Double

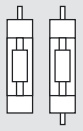

Note! for ordering of options type EN, ES, KRG, RT, ADG and MGK, see accessory index on page 127.

Ordering Keys

Linear Units with Ball Screw Drive and Ball Guides

MLSM60D, MLSM80D

Your Code							
	1	2	3	4	5	6	7
Example	MLSM06D	020	-03800	-04645	C	L	-0000

1. Type of unit
MLSM06D = MLSM60 unit
MLSM08D = MLSM80 unit

2. Ball screw lead
005 = 5 mm
010 = 10 mm
020 = 20 mm
040 = 40 mm
050 = 50 mm

3. Maximum stroke (S max)
- ••••• = distance in mm

4. Total length of unit (L tot)
- ••••• = distance in mm

5. Drive shaft configuration[2]
A = single shaft without key way
C = single shaft with key way
G = double shafts, first without key way and second for encoder
I = double shafts, first with key way and second for encoder

6. Carriage configuration
N = single standard carriage
L = single long carriage
Z = double standard carriages

7. Distance between double carriages
- 0000 = always for single carriages
- •••• = distance in mm

[1] See table below for available combinations of units and ball screw leads.

Type of unit	Available screw leads [mm]				
	5	10	20	40	50
MLSM06D	x		x		x
MLSM08D	x	x	x	x	

[2] See below for the definition of shafts.

Single Double

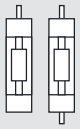

Ordering Keys

Linear Units with Ball Screw Drive and Ball Guides

2HBE10, 2HBE20

Your Code					
	1	2	3	4	5
Example	2HBE10-YP	H	-N	-	L0525

1. Type of unit
2HBE10-YP = 2HBE10 unit
2HBE20-YP = 2HBE20 unit

2. Ball screw diameter and lead[1]
G = 16 mm, 5 mm
H = 16 mm,10 mm
M = 25 mm, 5 mm
N = 25 mm, 10 mm
W = 25 mm, 25 mm

3. Drive shaft configuration
-N = NEMA configuration

4. Options
- = no option
B = bellows (reduces stroke by app. 28 %).
S = shrouds

5. Ordering length (L order)
L•••• = distance in mm

[1] See table below for available combinations of units and ball screw diameters and leads.

Type of unit	Available ball screw diameter and lead combinations				
	G	H	M	N	W
2HBE10	x	x			
2HBE20			x	x	x

Ordering Keys

Linear Units with Ball Screw Drive and Slide Guides

WB40

Your Code							
	1	2	3	4	5	6	7
Example	WB40S	020	-00500	-00700	C	N	0

1. Type of unit
WB04S = WB40 unit with ball screw
WB04T = WB40 unit with lead screw

2. Screw lead[1]
005 = 5 mm
008 = 8 mm
020 = 20 mm

3. Maximum stroke (S max)
- • • • • • = distance in mm

4. Total length of unit (L tot)
- • • • • • = distance in mm

5. Drive shaft configuration[2]
A = single shaft without key way
C = single shaft with key way
G = double shafts, first without key way and second for encoder
I = double shafts, first with key way and second for encoder

6. Carriage configuration
N = single standard carriage

7. Number of screw supports
0 = no screw supports

[1] See table below for available combinations of units and screw leads.

Type of unit	Available screw leads [mm]		
	5	8	20
WB04S	x		x
WB04T		x	

[2] Se below for the definition of shafts.

Single Double

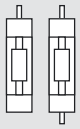

Ordering Keys

Linear Units with Ball Screw Drive and Slide Guides

M55, M75, M100

Your Code							
	1	2	3	4	5	6	7
Example	MG07	K057	C	10	S	305	+S1

1. Type of unit
MG06 = M55 unit
MG07 = M75 unit
MG10 = M100 unit

2. Ball screw type, lead and tolerance class[2]
C057 = composite nut, 5 mm, T7
K057 = ball nut, 5 mm, T7
KU57 = ball nut, 5,08 mm, T7
C109 = composite nut, 10 mm, T9
K107 = ball nut, 10 mm, T7
K109 = ball nut, 10 mm, T9
K129 = ball nut, 12,7 mm, T9
K207 = ball nut, 20 mm, T7
C257 = composite nut, 25 mm, T7
K257 = ball nut, 25 mm, T7
C329 = composite nut, 32 mm, T9

3. Type of carriages
A = single standard carriage
C = double standard carriages

4. Distance between carriages (Lc)
00 = for all single standard carriage units
•• = distance in cm between carriages

5. Screw supports
X = no screw supports
S = single screw supports
D = double screw supports

6. Ordering length (L order)
••• = distance in cm

7. Protection option[1]
+S1 = wash down protection

[1] Leave position blank if no additional protection is required.
[2] See table below for available combinations of units and ball screw type, lead and tolerance.

Ball screw type	Type of unit		
	M55	M75	M100
C057		x	
K057	x	x	x
KU57	x		
C109			x
K107	x		x
K109			x
K129		x	
K207	x	x	
C257			x
K257			x
C329	x		

Ordering Keys

Linear Units with Ball Screw Drive and Slide Guides

M75D, M100D

Your Code							
	1	2	3	4	5	6	7
Example	MG10	D109	A	00	X	355	

1. Type of unit
MG07 = M75D unit
MG10 = M100D unit

2. Ball screw type, lead and tolerance class[2]
D057 = double ball nut, 5 mm, T7
DU57 = double ball nut, 5,08 mm, T7
D107 = double ball nut, 10 mm, T7
D109 = double ball nut, 10 mm, T9
D129 = double ball nut, 12,7 mm, T9
D207 = double ball nut, 20 mm, T7
D257 = double ball nut, 25 mm, T7

3. Type of carriages
A = single standard carriage
C = double standard carriages

4. Distance between carriages (Lc)
00 = for all single standard carriage units
•• = distance in cm between carriages

5. Screw supports
X = no screw supports
S = single screw supports
D = double screw supports

6. Ordering length (L order)
••• = distance in cm

7. Protection option[1]
+S1 = wash down protection

[1] Leave position blank if no protection option required.
[2] See below table for available combinations of units and ball screw type, lead and tolerance.

Ball screw type	Type of unit	
	M75	M100
D057	x	x
DU57		
D107		x
D109		x
D129	x	
D207	x	
D257		x

Ordering Keys

Linear Units with Belt Drive and Ball Guides

WH40

Your Code						
	1	2	3	4	5	6
Example	WH04Z100	-01400	-01755	H	L	-0400

1. Type of unit
WH04Z100 = WH40 unit

2. Maximum stroke (S max)
- • • • • • = distance in mm

3. Total length of unit (L tot)
- • • • • • = distance in mm

4. Drive shaft configuration[1]
A = shaft on left side without key way
B = shaft on right side without key way
C = shaft on left side with key way
D = shaft on right side with key way
E = shaft on left side without key way and shaft on right side with key way
F = shaft on left side with key way and shaft on right side without key way
G = shaft on left side without key way and shaft on right side for encoder
H = shaft on left side for encoder and shaft on right side without key way
I = shaft on left side with key way and shaft on right side for encoder
J = shaft on left side for encoder and shaft on right side with key way
L = shaft on both sides without key way
M = shaft on both sides with key way

5. Carriage configuration
N = single standard carriage
L = single long carriage
Z = double standard carriages

6. Distance between double carriages
- 0000 = always for single carriages
- • • • • = distance in mm

[1] See below for the definition of shafts.

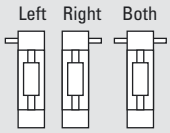

Note! for ordering of options type EN, ES, KRG, RT, ADG and MGK, see accessory index on page 127.

M55, M75, M100

Your Code						
	1	2	3	4	5	6
Example	MF06B105	A	00	X	450	+S1

1. Type of unit
MF06B105 = M55 unit
MF07B130 = M75 unit
MF10B176 = M100 unit

2. Type of carriages
A = single standard carriage
C = double standard carriages

3. Distance between carriages (Lc)
00 = for all single standard carriage units
• • = distance in cm between carriages

4. Drive shaft configuration
R = shaft on the side as shown in picture
Q = shaft on the side as shown in picture
X = shaft on both sides

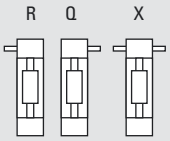

5. Ordering length (L order)
• • • = distance in cm

6. Protection option[1]
+S1 = wash down protection

[1] Leave blank if no protection option required.

Ordering Keys

Linear Units with Belt Drive and Ball Guides

MLSM80Z						
Your Code						
	1	2	3	4	5	6
Example	MLSM08Z200	-05000	-05570	A	N	-0000

1. Type of unit
MLSM08Z200 = MLSM80 unit

2. Maximum stroke (S max)
- • • • • • = distance in mm

3. Total length of unit (L tot)
- • • • • • = distance in mm

4. Drive shaft configuration[1]
A = shaft on left side without key way
B = shaft on right side without key way
C = shaft on left side with key way
D = shaft on right side with key way
E = shaft on left side without key way and shaft on right side with key way
F = shaft on left side with key way and shaft on right side without key way
G = shaft on left side without key way and shaft on right side for encoder
H = shaft on left side for encoder and shaft on right side without key way
I = shaft on left side with key way and shaft on right side for encoder
J = shaft on left side for encoder and shaft on right side with key way
L = shaft on both sides without key way
M = shaft on both sides with key way

5. Carriage configuration
N = single standard carriage
L = single long carriage
Z = double standard carriages

6. Distance between double carriages
- 0000 = always for single carriages
- • • • • = distance in mm

[1] See below for the definition of shafts.

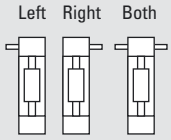

Ordering Keys

Linear Units with Belt Drive and Slide Guides

M50

Your Code				
	1	2	3	4
Example	MG05B130	A00	R	560

1. Type of unit
MG05B130 = M50 unit

2. Type of carriage
A00 = single standard carriage

3. Drive shaft configuration
R = shaft on the side as shown in picture
Q = shaft on the side as shown in picture
X = shaft on both sides

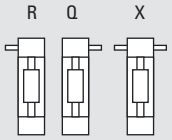

4. Ordering length (L order)
••• = distance in cm

M55, M75, M100

Your Code						
	1	2	3	4	5	6
Example	MG06B105	A	00	X	450	+S2

1. Type of unit
MG06B105 = M55 unit
MG07B130 = M75 unit
MG10B176 = M100 unit

2. Type of carriages
A = single standard carriage
C = double standard carriages

3. Distance between carriages (Lc)
00 = for all single standard carriage units
•• = distance in cm between carriages

4. Drive shaft configuration
R = shaft on the side as shown in picture
Q = shaft on the side as shown in picture
X = shaft on both sides

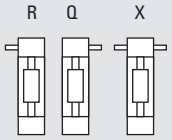

5. Ordering length (L order)
••• = distance in cm

6. Protection option[1]
+S1 = wash down protection
+S2 = chemical protection

[1] Leave blank if no protection option required.

Ordering Keys

Linear Units with Belt Drive and Wheel Guides

WH50, WH80, WH120

Your Code						
	1	2	3	4	5	6
Example	WH08Z200	-02300	-02710	J	L	-0000

1. Type of unit
WH05Z120 = WH50 unit
WH08Z200 = WH80 unit
WH12Z260 = WH120 unit

2. Maximum stroke (S max)
- • • • • • = distance in mm

3. Total length of unit (L tot)
- • • • • • = distance in mm

4. Drive shaft configuration[1]
A = shaft on left side without key way
B = shaft on right side without key way
C = shaft on left side with key way
D = shaft on right side with key way
E = shaft on left side without key way and shaft on right side with key way
F = shaft on left side with key way and shaft on right side without key way
G = shaft on left side without key way and shaft on right side for encoder
H = shaft on left side for encoder and shaft on right side without key way
I = shaft on left side with key way and shaft on right side for encoder
J = shaft on left side for encoder and shaft on right side with key way
L = shaft on both sides without key way
M = shaft on both sides with key way
V = shaft on both sides for Micron DT/DTR planetary gear option

5. Carriage configuration
N = single standard carriage
L = single long carriage
Z = double standard carriages

6. Distance between double carriages
- 0000 = always for single carriages
- • • • • = distance in mm

[1] See below for the definition of shafts.

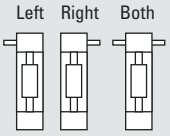

Note! for ordering of options type EN, ES, KRG, RT, ADG and MGK, see accessory index on page 127.

Ordering Keys

Linear Units with Belt Drive and Wheel Guides

MLSH60Z, MLSH80Z

Your Code						
	1	2	3	4	5	6
Example	MLSH06Z135	-04500	-05580	D	Z	-0600

1. Type of unit
MLSH06Z135 = MLSH60 unit
MLSH08Z200 = MLSH80 unit

2. Maximum stroke (S max)
- • • • • • = distance in mm

3. Total length of unit (L tot)
- • • • • • = distance in mm

4. Drive shaft configuration[1]
A = shaft on left side without key way
B = shaft on right side without key way
C = shaft on left side with key way
D = shaft on right side with key way
E = shaft on left side without key way and shaft on right side with key way
F = shaft on left side with key way and shaft on right side without key way
G = shaft on left side without key way and shaft on right side for encoder
H = shaft on left side for encoder and shaft on right side without key way
I = shaft on left side with key way and shaft on right side for encoder
J = shaft on left side for encoder and shaft on right side with key way
L = shaft on both sides without key way
M = shaft on both sides with key way

5. Carriage configuration
N = single standard carriage
L = single long carriage
Z = double standard carriages

6. Distance between double carriages
- 0000 = always for single carriages
- • • • • = distance in mm

[1] See below for the definition of shafts.

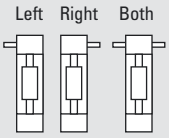

Ordering Keys

Linear Lifting Units

WHZ50, WHZ80

Your Code						
	1	2	3	4	5	6
Example	WHZ08Z200	-01000	-01410	A	N	-0000

1. Type of unit
WHZ05Z120 = WHZ50 unit
WHZ08Z200 = WHZ80 unit

2. Maximum stroke (S max)
- • • • • • = distance in mm

3. Total length of unit (L tot)
- • • • • • = distance in mm

4. Drive shaft configuration[1]
A = shaft on left side without key way
B = shaft on right side without key way
C = shaft on left side with key way
D = shaft on right side with key way
E = shaft on left side without key way and shaft on right side with key way
F = shaft on left side with key way and shaft on right side without key way
G = shaft on left side without key way and shaft on right side for encoder
H = shaft on left side for encoder and shaft on right side without key way
I = shaft on left side with key way and shaft on right side for encoder
J = shaft on left side for encoder and shaft on right side with key way
L = shaft on both sides without key way
M = shaft on both sides with key way

5. Carriage configuration
N = single standard carriage
L = single long carriage
Z = double standard carriages

6. Distance between double carriages
- 0000 = always for single carriages
- • • • • = distance in mm

[1] See below for the definition of shafts.

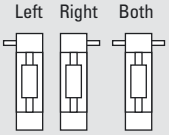

Note! for ordering of options type EN, ES, KRG, RT, ADG and MGK, see accessory index on page 127.

Z2, Z3

Your Code				
	1	2	3	4
Example	MGZ3K	25259	250	450

1. Type of unit
MGZ2K = Z2 unit
MGZ3K = Z3 unit

2. Ball screw diameter, lead and tolerance class
25109 = 25 mm, 10 mm, T9
25259 = 25 mm, 25 mm, T9
32207 = 32 mm, 20 mm, T7

3. Minimum retracted length (L min)
• • • = distance in cm

4. Maximum extended length (L max)
• • • = distance in cm

Ordering Keys

Linear Lifting Units

ZB			
Your Code			
	1	2	3
Example	MF-ZB200A00	X	150

1. Type of unit
MF-ZB200A00 = ZB unit

2. Drive shaft configuration
R = shaft on the side as shown in picture
Q = shaft on the side as shown in picture
X = shaft on both sides

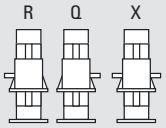

3. Ordering lenght (L order)
••• = distance in cm

Ordering Keys

Linear Rod Units

WZ60

Your Code						
	1	2	3	4	5	6
Example	WZ06S	20	-00350	-00780	C	N

1. Type of unit
WZ06S = WZ60 unit

2. Ball screw lead
05 = 5 mm
20 = 20 mm
50 = 50 mm

3. Maximum stroke (S max)
- • • • • • = distance in mm

4. Total length of unit (L tot)
- • • • • = distance in mm

5. Drive shaft configuration
A = shaft without key way
C = shaft with key way

6. Extension tube configuration
N = standard

Note! for ordering of options type EN, ES, KRG, RT and MGK, see accessory index on page 127.

T90, T130

Your Code						
	1	2	3	4	5	6
Example	T09-B	2525	M	P	450	+S1

1. Type of unit
T09-B = T90 unit
T13-B = T130 unit

2. Ball screw diameter, lead and tolerance class
2505 = 25 mm, 05 mm, T7 (only possible for T09-B)
2510 = 25 mm, 10 mm, T7 (only possible for T09-B)
2525 = 25 mm, 25 mm, T7 (only possible for T09-B)
3220 = 32 mm, 20 mm, T7 (only possible for T09-B)
3232 = 32 mm, 32 mm, T7 (only possible for T09-B)
4010 = 40 mm, 10 mm, T7 (only possible for T13-B)
4020 = 40 mm, 20 mm, T7 (only possible for T13-B)
4040 = 40 mm, 40 mm, T7 (only possible for T13-B)

3. Engineering unit
M = metric

4. Type of adapter
N = M16 × 1,5 outside thread (only possible for T09-B25 • •)
P = M16 × 2 inside thread (only possible for T09-B25 • •)
Q = M20 × 1,5 outside thread (only possible for T09-B32 • •)
R = M20 × 1,5 inside thread (only possible for T09-B32 • •)
S = M27 × 2 outside thread (only possible for T13-B • •)
T = M27 × 2 inside thread (only possible for T13-B • •)
U = M33 × 2 outside thread (only possible for T13-B • •)
V = M33 × 2 inside thread (only possible for T13-B • •)
X = M30 × 2 inside thread (only possible for T13-B • •)

5. Ordering length (L order)
• • • = distance in cm

6. Protection option[1]
+S1 = wash down protection

[1] Leave blank if no protection option required.

Ordering Keys

Undriven Units

WH40N, WH50N, WH80N, WH120N

Your Code						
	1	2	3	4	5	6
Example	WH04N000	-04500	-04640	K	N	-0000

1. Type of unit
WH04N000 = WH40N unit
WH05N000 = WH50N unit
WH08N000 = WH80N unit
WH12N000 = WH120N unit

2. Maximum stroke (S max)
- • • • • • = distance in mm

3. Total length of unit (L tot)
- • • • • • = distance in mm

4. Drive shaft configuration[1]
K = no shaft

5. Carriage configuration
N = single standard carriage
L = single long carriage
Z = double standard carriages

6. Distance between double carriages
- 0000 = always for single carriages
- • • • • = distance in mm

WM40N, WM60N, WM80N, WM120N

Your Code						
	1	2	3	4	5	6
Example	WM08N000	-07010	-07210	K	N	-0000

1. Type of unit
WM04N000 = WM40N unit
WM06N000 = WM60N unit
WM08N000 = WM80N unit
WM12N000 = WM120N unit

2. Maximum stroke (S max)
- • • • • • = distance in mm

3. Total length of unit (L tot)
- • • • • • = distance in mm

4. Drive shaft configuration
K = no shaft

5. Type of carriage[1]
N = single standard carriage
S = single short carriage
L = single long carriage
Z = double standard carriages
Y = double short carriages

6. Distance between double carriages
- 0000 = always for single carriages
- • • • • = distance in mm

[1] See table below for available combinations of units and carriage types.

Type of unit	Available carriage types				
	N	S	L	Z	Y
WM04N000	x		x	x	
WM06N000	x	x	x	x	x
WM08N000	x	x	x	x	x
WM12N000	x		x	x	

Ordering Keys

Undriven Units

M75N, M100N

Your Code						
	1	2	3	4	5	6
Example	MG10N000	A	00	X	450	

1. Type of unit
MG07N000 = M75N unit with slide guides
MG10N000 = M100N unit with slide guides
MF07N000 = M75N unit with ball guides
MF10N000 = M100N unit with ball guides

2. Type of carriages
A = single standard carriage
C = double standard carriages

3. Distance between carriages (Lc)
00 = for all single standard carriage units
•• = distance in cm between carriages

4. Screw supports
X = no screw supports

5. Ordering length (L order)
••• = distance in cm

6. Protection option[1]
+S1 = wash down protection

[1] Leave blank if no protection option required.

THOMSON NEFF™
THOMSON TOLLO™

Solutions by DANAHER MOTION

FOR IMMEDIATE ASSISTANCE:

Internet: www.DanaherMotion.com

United Kingdom:
Danaher Motion
Chartmoor Road, Chartwell Business Park
Leighton Buzzard, Bedfordshire, LU7 4WG
Phone: +44 (0)1525 243 243
Fax: +44 (0)1525 243 244
E-mail: uksales@danahermotion.com

France:
Danaher Motion
C.P 80018
12, Rue Antoine Becquerel – Z.I. Sud
F – 72026 Le Mans Cedex 2
Phone: +33 (0) 243 50 03 30
Fax: +33 (0) 243 50 03 39
E-mail: sales.france@tollo.com

Germany:
Danaher Linear GmbH
Nürtinger Str. 70
D-72649 Wolfschlugen
Phone: +49 (0) 70 22 504-0
Fax: +49 (0) 70 22 504-163
E-mail: info@danahermotion.net

Italy:
Danaher Motion srl
Largo Brughetti
I - 20030 Bovisio Masciago
Phone: +39 0362 594260
Fax: +39 0362 594263
E-mail: info@danahermotion.it

Sweden:
Danaher Motion
Box 9053
SE-29109 Kristianstad
Phone: +46 (0)44 24 67 00
Fax: +46 (0)44 24 40 85
Email: helpdesk@tollo.com

Switzerland:
Danaher Motion
La Pierreire 2
1029 Villars-Ste-Croix
Switzerland
Phone: +41 (0) 21 631 33 33
Fax: +41 (0) 21 636 05 09
E-mail: info@danaher-motion.ch